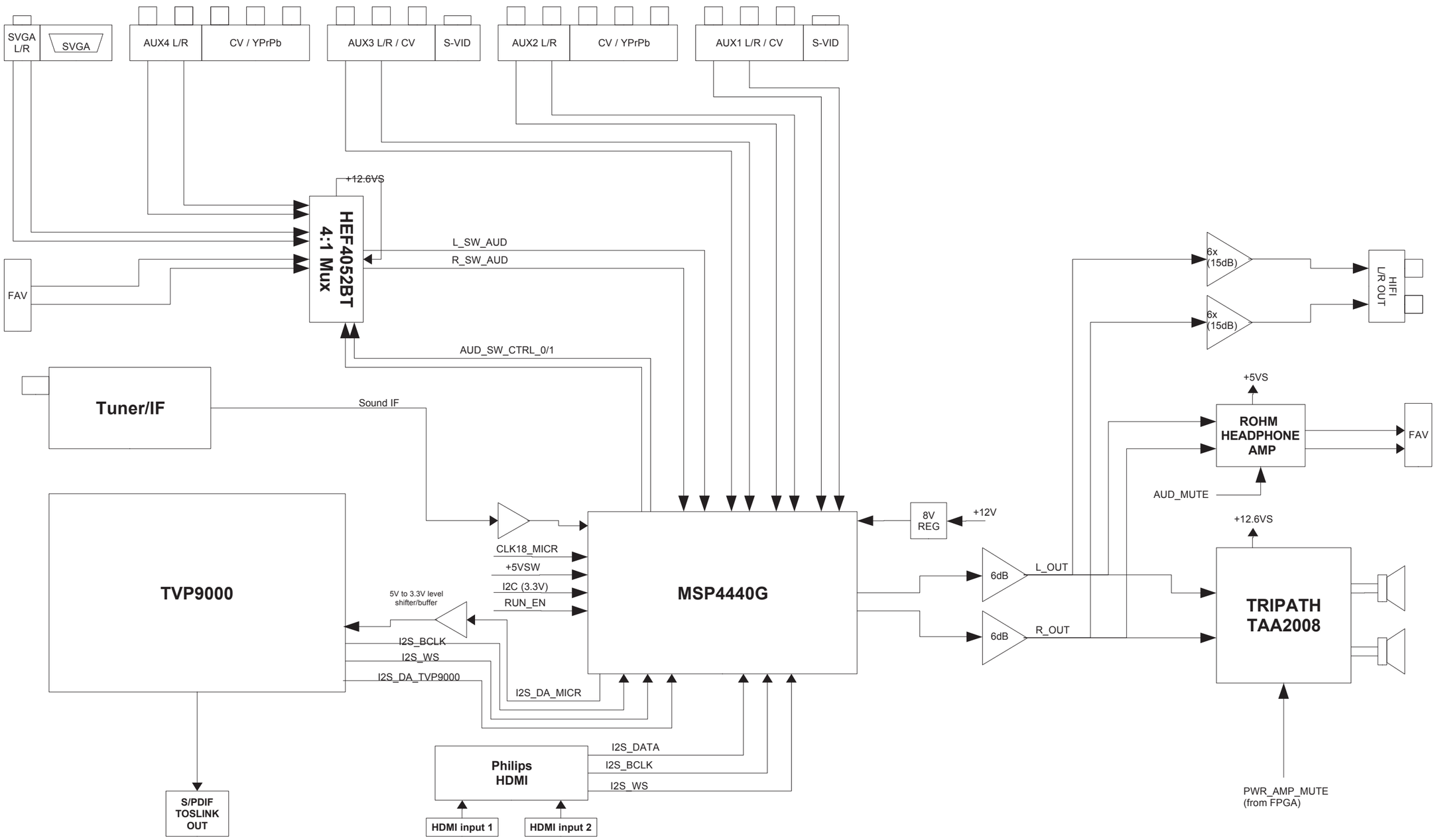ADM3 BLOCK DIAGRAM