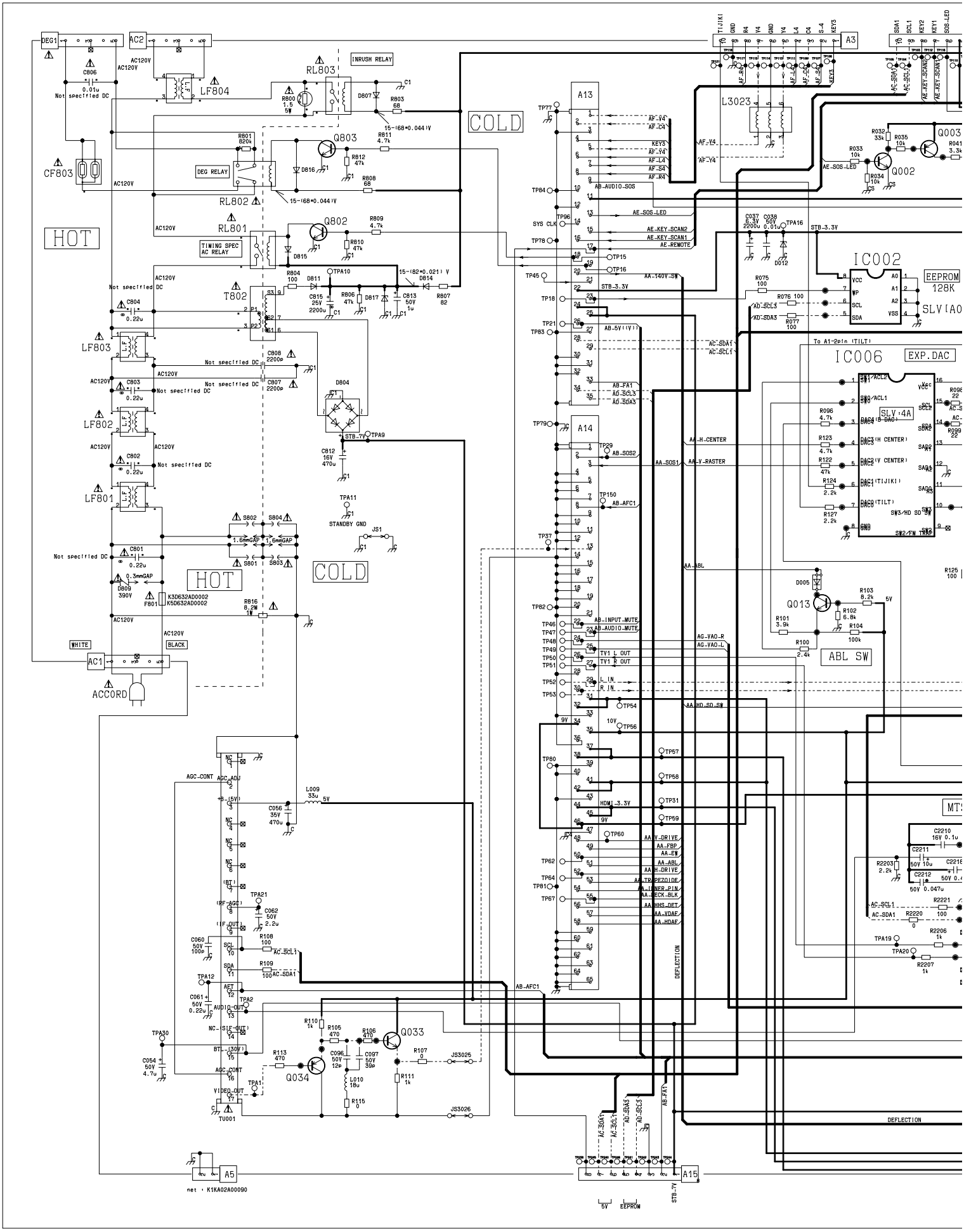

Note: Refer to parts list for correct value of components. A-BOARD 1/3 TNP2AH071AB CT-32HL15N/UN