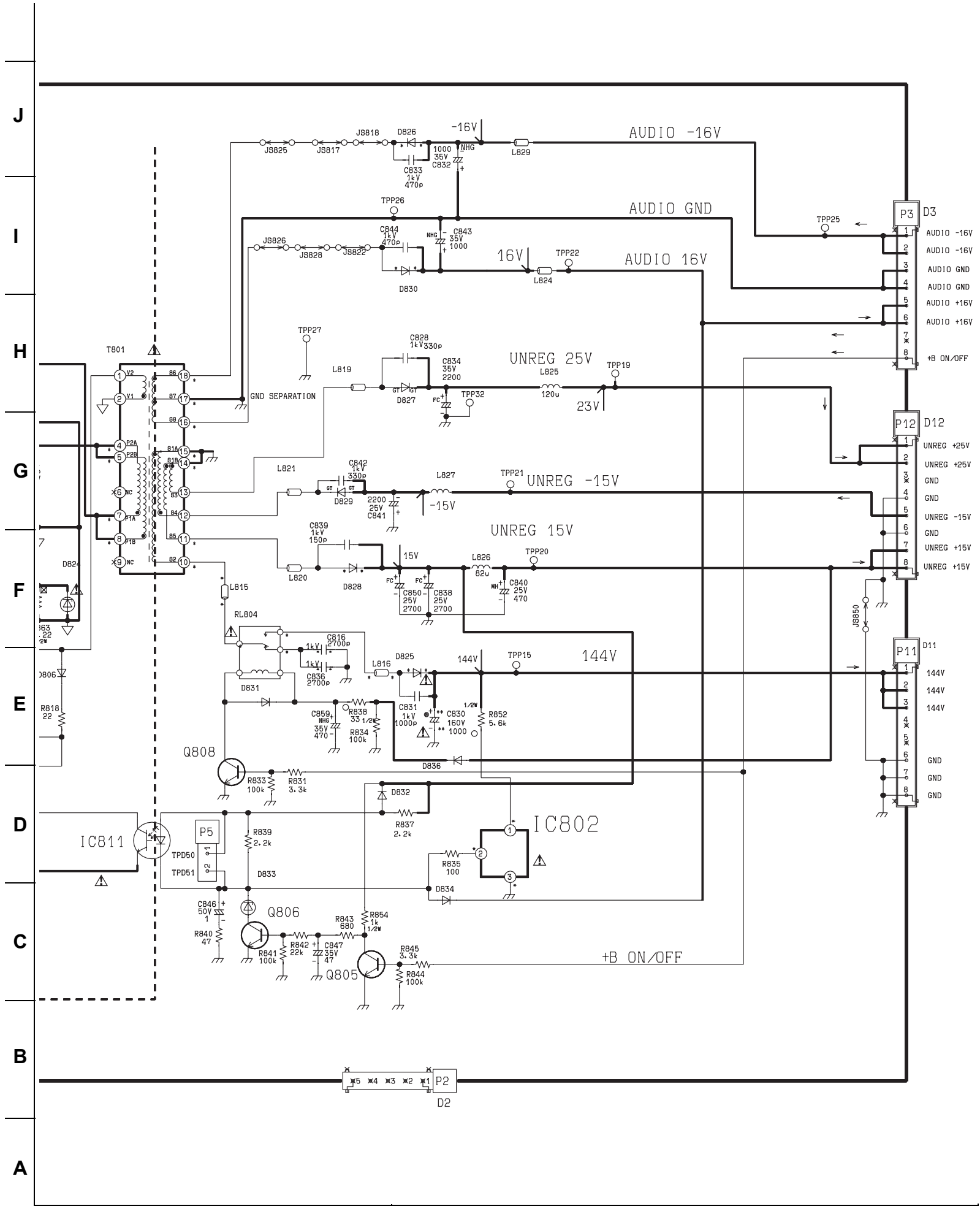

-BOARD 2/2 TNP2AA148 CT-36HL43G/UG, CT-32HL43G/UG, CT-32HXC43UG