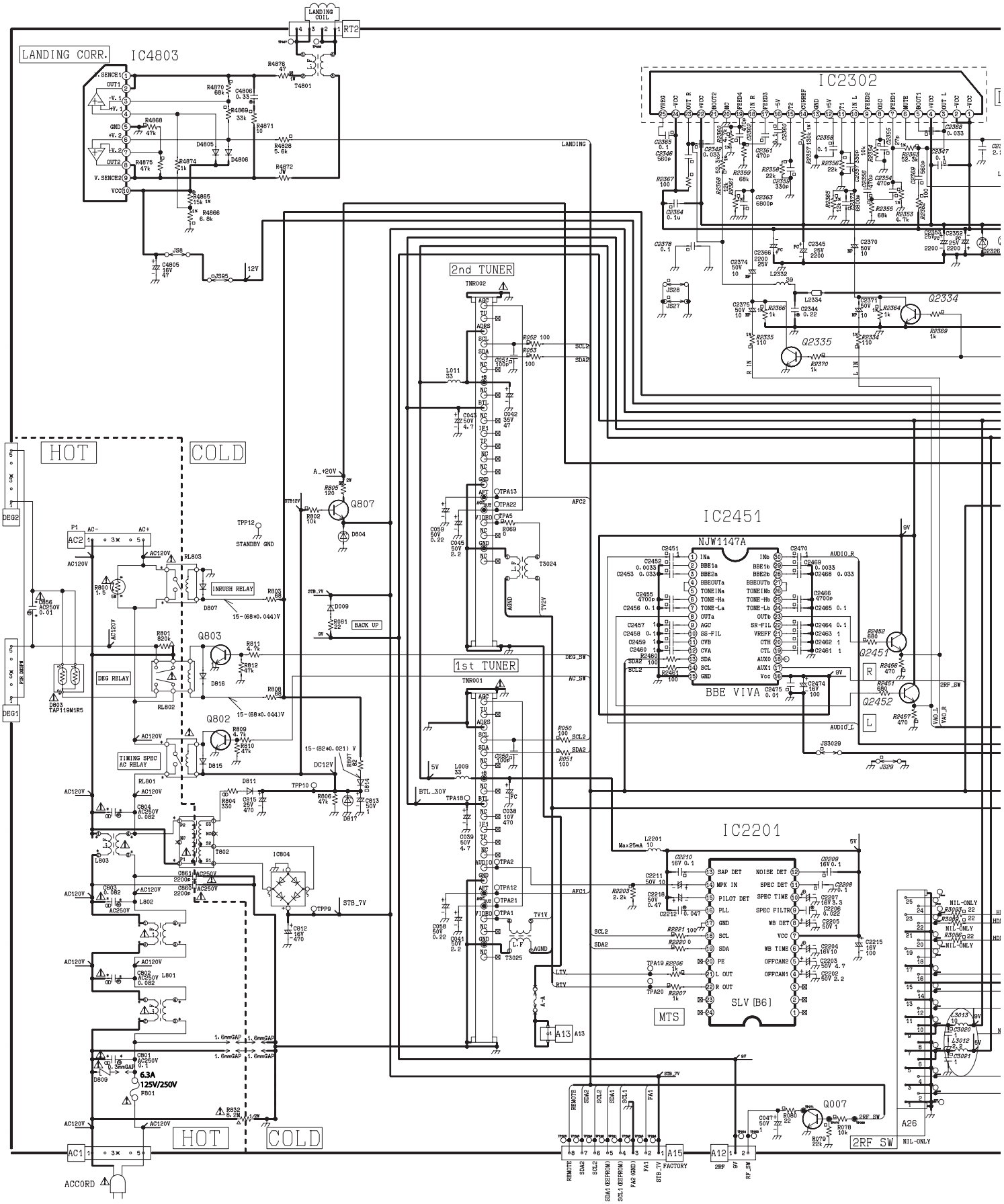

A-BOARD 1/3 TNP2AH050/AB CT-36HL43G/UG, CT-32HL43G/UG, CT-32HXC43UG