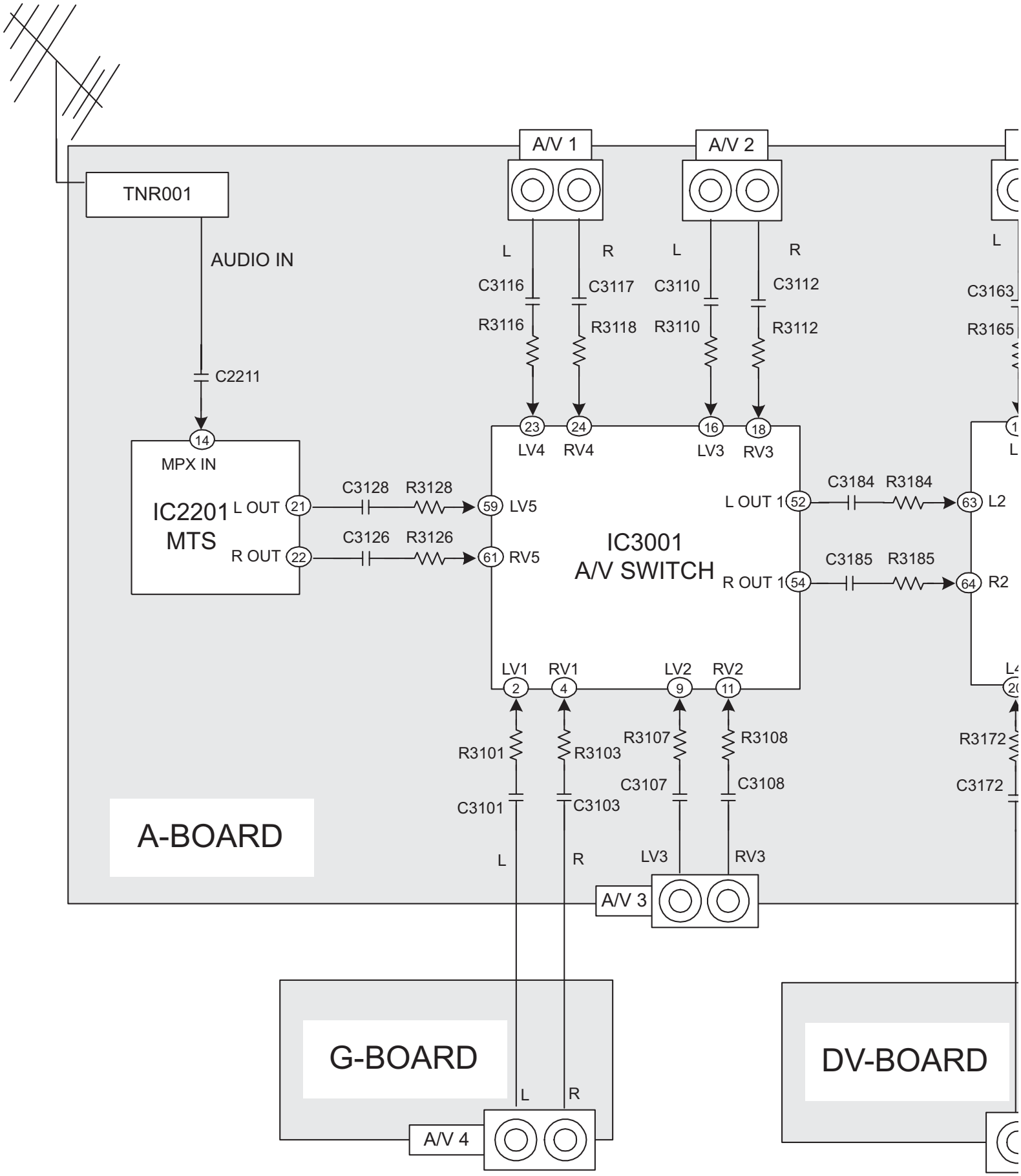
TNR001
AUDIO IN
C2211
14
MPX IN
IC2201
MTS
L OUT
21
R OUT
22
C3128
R3128
C3126
R3126
59
LV5
61
RV5
A/V 1
A/V 2
L
R
C3116
C3117
R3116
R3118
C3110
C3112
R3110
R3112
23
24
16
18
LV4
RV4
LV3
RV3
IC3001
A/V SWITCH
L OUT 1
52
R OUT 1
54
C3184
R3184
C3185
R3185
63
64
L2
R2
C3163
R3165
LV1
RV1
LV2
RV2
2
4
9
11
R3101
R3103
R3107
R3108
C3101
C3103
C3107
C3108
R3172
C3172
A-BOARD
LV3
RV3
A/V 3
G-BOARD
A/V 4
DV-BOARD

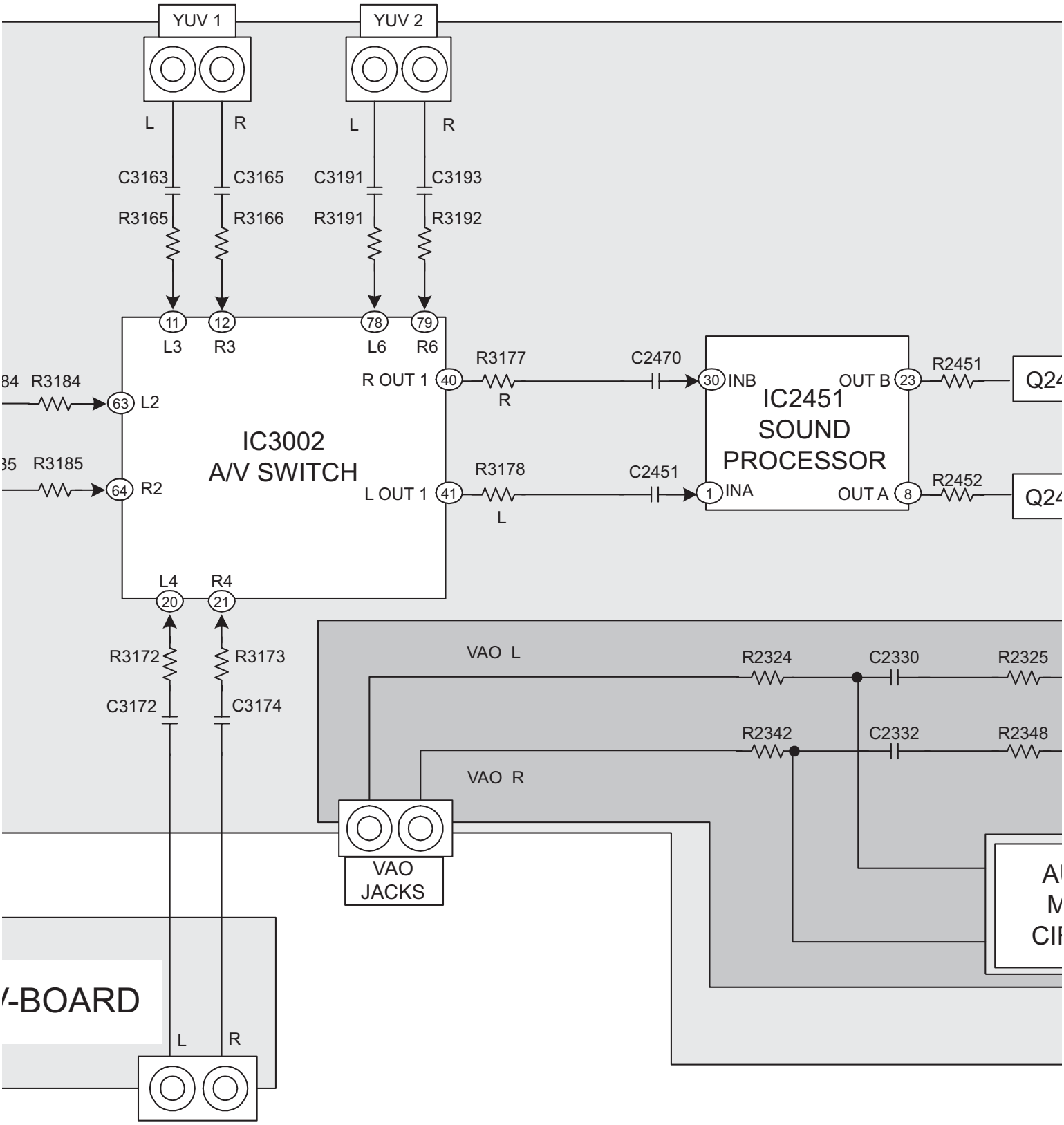
YUV 1
YUV 2
L
R
L
R
C3163
C3165
C3191
C3193
R3165
R3166
R3191
R3192
11
12
78
79
L3
R3
L6
R6
R3177
C2470
R2451
R OUT 1
40
R
30
INB
OUT B
23
IC2451
SOUND
PROCESSOR
63
L2
IC3002
A/V SWITCH
R3178
C2451
R2452
64
R2
L OUT 1
41
L
1
INA
OUT A
8
L4
R4
20
21
R3172
R3173
VAO L
R2324
C2330
R2325
C3172
C3174
R2342
C2332
R2348
VAO R
VAO
JACKS
L
R

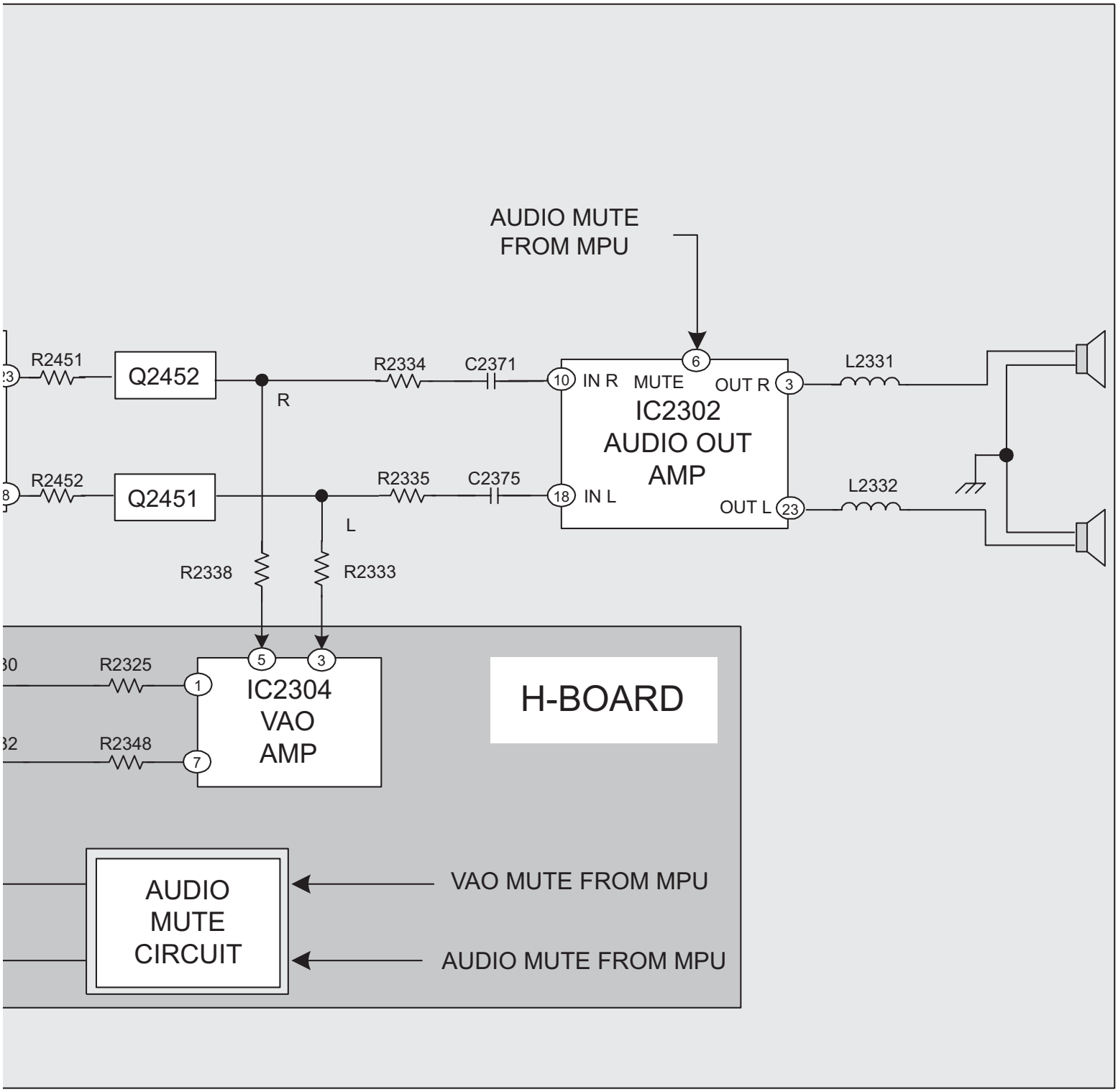
AUDIO MUTE
FROM MPU
R2451
Q2452
R2452
Q2451
R
L
R2334
C2371
R2335
C2375
10
IN R
6
MUTE
OUT R
3
18
IN L
OUT L
23
IC2302
AUDIO OUT
AMP
L2331
L2332
R2338
R2333
5
3
R2325
1
R2348
7
IC2304
VAO
AMP
H-BOARD
AUDIO
MUTE
CIRCUIT
VAO MUTE FROM MPU
AUDIO MUTE FROM MPU