How To Repair Solid-State Imports

903G

No. 532
$7.95

How To Repair Solid-State Imports

By Paul Lawrence

FIRST EDITION

FIRST PRINTING — JULY 1970

Copyright © 1970 by TAB BOOKS

Printed in the United States
of America

Reproduction or publication of the content in any manner, without express permission of the publisher, is prohibited. No liability is assumed with respect to the use of the information herein.

Library of Congress Card Number: 70-129047

Contents

1 IMPORTS VS DOMESTIC 7

When is Service Profitable? —Obtaining Service Data and Parts

2 BASIC CIRCUIT DESCRIPTIONS 9

Audio Section—IF Circuits—Dectector-AVC—Converter Circuits—AM-FM Receivers—Tape Recorders—Transistor Portable Television Circuits

3 SERVICING PROCEDURES 23

Locating the Trouble—Locating the Trouble in AM-FM—Locating Oscillator Troubles—How to Locate a Defective Transistor—In-Circuit Tests—Out of Circuit Tests—Other Tests—Special Techniques and Hints—Other Hints—IF Hints

4 TROUBLESHOOTING WITHOUT A SCHEMATIC 36

Finding a Comparable Circuit Diagram—Signal Tracing—Checking a TV Set Without a Schematic—Sketch Out the Circuit—Making Resistance Measurements—Checking Transistors In-Circuit with an Ohmmeter—What About Transistor Replacements?—Capacitor Replacements—Transformer Replacements—Use Exact Replacements When Possible

5 TYPICAL CIRCUIT DIAGRAMS 45

APPENDIX 129

Importers & Distributors Of Japanese Consumer Electronic Products 129
Private Brand Importers 143
Unknown Importers & Distributors 144
Tape Recorder Importers 144
Japanese Color Television Importers 147
Japanese Black & White Television Importers 148
United States Distributors Of Cassette Tape Recorders 149
Japanese Transistor Radio Importers 151

LIST OF SCHEMATICS

AM - FM Multiplex

Crown Model FM-300, 12 transistors
Crown Model FM-500, 18 transistors
Crown Model SHC-55, 29 transistors
Lloyd's Model 8M35-92A, 20 transistors
Midland Model 19-560, 33 transistors, plus ICs
Penncrest Model 4912, 14 transistors
Penncrest Model 5905, 20 transistors

AM - FM Receivers

Allied Model 2600, 21 transistors
Allied Model 2691, 17 transistors
Emerson Model 3IL65, 31L66, 10 transistors
Emerson Model 31P67, 10 transistors
Emerson Model 31P75, 11 transistors
Emerson Model 33C45W, 16 transistors
Lloyd's Model 9J41-100A, 10 transistors
Lloyd's Model 9J42-37A, 10 transistors
Panasonic Model RF-835, 9 transistors
Panasonic Model 7878, 10 transistors
Penncrest Model 1903A, 16 transistors
Penncrest Model 5345, 7 transistors
Penncrest Model 5391A, 9 transistors
RCA Model RZM 140, 10 transistors
RCA Model RZM 145, 150, 10 transistors
RCA Model RZM 160, 9 transistors
RCA Model RZM 170, 10 transistors
RCA Model RZM 177, 10 transistors

AM - VHF - Multiband

Lloyd's Model 9H34-34A, 21-transistors
Panasonic Model RF-1600, 16 transistors
Penncrest Model 1993, 12 transistors
RCA Model 990-K, 10 transistors

Auto Radio

Medallion Model 65-225 AM-FM, 11 transistors
Medallion Model 65-230 FM stereo, 19 transistors

B&W TV

Crown Model 7TV-1, 33 transistors
Crown Model 7TV-2, 29 transistors
Midland Model 15-009, 23 transistors, 1 tube, foldout Panel B
Midland Model 15-114, 12 tube, 1 transistor, foldout Panel C
Olympic Model 9P44, 45, 46, 54, 13-tube
Panasonic Model AN-72, 72C, 77C, 16-tube, 1 transistor
Panasonic Model TR-329B, 27 transistors
Panasonic Model TR-449B, 26 transistors
Panoramic Model TR-110, 27 transistors, foldout Panel E
Penncrest Model 1313, 27 transistors
Penncrest Model 1314, 23 transistors, 3-tube foldout Panel F
Penncrest Model 1314B-89 (Fig. 2-12) foldout Panel A
Penncrest Model 1318-48, 24 transistors, foldout Panel G
Penncrest Model 2310-44, 15 tube, 1-transistor
Penncrest Model 2311-82, 16 tube
Penncrest Model 2326, 15 tube, 1 transistor
Penncrest Model 2331, 2318, 2324, 2328, 16 tube 1 transistor
Penncrest Model 2363-43, 16 tube, 1 transistor
Penncrest Model 2374-87, 15-tube, 1 transistor

Color TV

Midland Model 15-214, 17 tube, 2 transistors, foldout Panel D
Olympic Model CT-400, 22-tube, foldout Panel H
Panasonic Model CT93P, 20-tube, 4 transistors, foldout Panel M
Penncrest Model 2881, 10-tube, 24 transistors, foldout Panel L
Penncrest Model 2884, 16-tube, 14 transistors, foldout Panel J
Penncrest Model 2893, 26-tube, 1 transistor, foldout Panel K

Portable AM Receivers

Emerson Model 31T58, 6 transistors
Lloyd's Model 9J45-37A, 6 transistors
Midland Model 10-319, 7 transistors
Panasonic Model 1089, 6 transistors
Panasonic Model R-1329, 7 transistors
Penncrest Model 1145, 7 transistors
Penncrest Model 1624A, 7 transistors
Penncrest Model 3530, 6 transistors
RCA Model RCG111, 120, 7 transistors
RCA Model RZG107, 6 transistors
RCA 6 transistors

Tape Recorder Cassette

Channel Master Model 6305
Lloyd's Model 9V89-92A, 15 transistors
Lloyd's Model 9V95-114A, 5 transistors
Mercury Model TR-5000
Panasonic Model RQ-2045, 6 transistors
Panasonic Model RQ-2335, 9 transistors
Penncrest Model 3110, 9 transistors
Penncrest Model 3240, 12 transistors
Penncrest Model 6517, 7 transistors
Penncrest Model 6521, 10 transistors
Wollensak Model 4000, 8 transistors
Wollensak Model 4300, 8 transistors

Tape Recorder reel-to-reel

Crown Model CTR-9000A, 7 transistors
Mercury Model 20-1002, 5 transistors
Penncrest Model 3110, 5 transistors
Penncrest Model 6111-6111A, 4 transistors
Penncrest Model 6112, 4 transistors
Penncrest Model 6315, 4 transistors
Philco-Ford Model TRC-20, 7 transistors
Philco-Ford Model TRC-21, TRC-26, 8 transistors
RCA Model YYS510, YZS505, 510, 6 transistors
RCA Model YZB515, 8 transistors
RCA Model YZB525, 8 transistors
RCA Model YZD593, 10 transistors

Preface

You can walk into almost any department, drug, or discount store and find pocket-size transistor radios, hi-fi sets, recorders, and other items which are labeled, "Made in Japan" or other foreign country. Millions of these goods are sold in the U. S. every year and the figures keep climbing. The Electronics Industries Association (EIA) indicated in one of its past reports that in the first nine months of 1968, almost eight million dollars was spent on imported AM home radios alone. This compares with three million dollars spent for the same type of radio made in the U. S.

Obviously, foreign products enjoy a large market here and you likely have one or more in your own home. Probably one of the reasons many people purchase imported units is because their cost is generally lower than comparable products made in the U. S. Since labor costs are lower in foreign countries, many U. S. manufacturers take advantage of the situation and compete by having products made overseas to their specifications and shipped to this country.

The point is that regardless of where you go or what type of entertainment products you intend to service, chances are pretty good that some will be foreign made. It is the purpose of this book to help you service those radios, TV sets, recorders, and other electronic equipment for which schematics are not readily available. We do this by including not only typical schematic diagrams, but also by providing practical troubleshooting and repair hints supplied by technicians thoroughly experienced on these units. Following the Contents, there is a list of the schematics contained in this book–both by manufacturer and by type (AM, AM/FM, B & W TV, color TV, etc.). It is hoped this listing will help locate a particular schematic or one similar to the one needed.

As the American buying public purchases more and more imported transistorized products, one problem becomes increasingly apparent--if a technician is to service these imported items, in many cases it means a profit only if a quick and efficient repair can be made. And in those instances where replacement parts and service data are hard to come by, a profitable service job is more difficult. Accordingly, our purpose is to help you to determine when a job can be profitable, and then how to get it done. To help locate parts, etc., the Appendix lists suppliers for a number of Japanese and other foreign names. Profitable repair of imports is possible, but you must know what you're doing!

CHAPTER 1

Imports vs Domestic

From outward appearances, the imported transistor radio, tape player, or TV set looks much like the same type of units made here in the United States. In many instances, a domestic manufacturer has some of his product line built to his specifications overseas and then shipped to the U.S. carrying his brand name. Since these units are made to fit the manufacturer's normal product line, it is difficult to tell a foreign-made item from a domestic one at a glance. Usually, though, it will bear the words "Made in Japan" or in some other way be marked as to the place of manufacture.

Circuit designs are basically the same as in any other unit of the same type. When the circuit "works" are exposed, you will likely find IF transformers that look like those in any similar unit. However, you may find that many of the resistors, capacitors, and coils are smaller or bear markings that do not mean anything to you. This is one of the differences between some foreign- and domestic-made units. But the really major differences are those involved with the local availability of parts and servicing information. You cannot always get a schematic diagram or service manual for a foreign product. And many times it is almost impossible to obtain an exact replacement transistor or transformer. This situation is gradually improving, but there is still the problem of availability, even for many manufacturers who have one or two U.S. based representatives.

Originally, the problem of servicing imported transistor radios was almost completely unchallenged because many technicians refused to have anything to do with them. In fact, transistorized equipment of any make was shunned because of the lack of knowledge of circuit operation. Today's modern technician is accepting his role in the rapidly advancing field of solid-state electronics and is using his experience to provide a profitable service business in all consumer products including those of foreign manufacturers.

WHEN IS SERVICE PROFITABLE?

We mentioned that imported consumer products are lower in price than many comparable items made here in the U.S. We also said that service information and replacement parts were hard to come by. If this is true, how does a service technician or dealer justify a repair on a portable radio costing $9.95? At today's labor costs, many shops have set minimums on service work to eliminate the problem of minor radio checks and nuisance calls. While it might be difficult to repair a customer's defective nine dollar radio and still make a profit, the good will it creates with a regular customer could justify the inconvenience. Many times the repairs involved in small transistor radios can be quickly traced to minor problems, such as incorrect battery installation, dead batteries, or broken battery connections. In these cases, a repair is justified.

On transistorized units costing $20.00 or more, a close visual inspection, voltage checks, and a practical stage-by-stage analysis can be made to affect a profitable repair–providing the service technician has some idea of where to start. If a schematic diagram for the particular item is not available and repair without it means "fumbling" through the circuit, then a reasonable profit, in terms of dollars, flies out the window. On the other hand, the experience gained might be applied to similar cases later which would be profitable. These things should be considered in the overall plans for future sales and service business.

Another point worth mentioning is that gaining some first-hand know-how on imported units may be a feather in your cap with potential customers who cannot get service elsewhere in your area. Obviously, this, too, will help create future sales and service business. Imported consumer goods are here to stay and a profit can be made in servicing these items just as in servicing domestic units. However, at present this might mean that at least some of the service profit–not readily apparent on very inexpensive items–must be projected in terms of your overall future business picture.

OBTAINING SERVICE DATA AND PARTS

If you agree that the availability of service information and replacement parts is one of the biggest headaches a technician faces in the repair of foreign import equipment, then you must agree also that the enterprising technician will find a way to do the job, if possible.

There are several steps you can take to get service data on a radio, tape recorder, or what have you. First, be sure you check inside the cover of the unit to see if a schematic diagram is glued to the cover, chassis, or cabinet. Many pocket receivers have a tiny, hard-to-read (but better than nothing) schematic glued to the inside of the case. Many times the schematic is included in an operating pamphlet provided with the unit, so ask the customer for this material before you spend a lot of useless time hunting a schematic. If none of these methods turns up a schematic or other service information, copy down the model number, which should be found someplace on the outside or inside of the unit or from the customer's operating instructions. If the product has a U.S. manufacturer's name, simply write to the manufacturer's service department or customer relations division and request the information you want. Be sure to write legibly and give them plenty of details as to model number, serial number, type, description, etc. Don't be afraid to give them too much. They will toss out what they don't need and it will eliminate a delay caused by having to answer their request for additional information.

If the product is identified with a foreign manufacturer's name, check the listing in the Appendix. It is fairly complete and should give you the information you need. However, if you still cannot find the brand name listed, write to the Electronics Division, Japan Light Machinery Information Center, 437 Fifth Avenue, New York, New York 10016. Again, give them all the details; they have the listing of hundreds of foreign manufacturers and representatives both here and overseas.

Many of the foreign import products on the market today are represented by U.S. based firms which stock an adequate supply of replacement parts. Since time and expense are frequently determining factors in obtaining parts and service information, we have provided typical schematic diagrams and circuit information for many of the types of units you are likely to encounter, including color TV sets and cassette recorders. Although these schematic diagrams may not represent the exact unit you are concerned with, they should be somewhat close in circuit resemblance and give you an idea at least of where and what to look for during troubleshooting.

In compiling these schematics, many manufacturers indicated that information and replacement parts are available, but some have complete and others only partial stocks. Service manuals are also available for many of these units, some at no charge, while for others there is a slight fee. With the exception of the more critical parts, such as IF and audio transformers, dials and special coils, many transistor radio parts are interchangeable–and can be used as replacements with little or no modification. Miniature capacitors, transistors, resistors, diodes, and speakers are now more familiar items on the local parts distributor's shelves. Replacement or substitute transistors for most circuit applications are now easily found by cross-reference in a number of popular transistor substitution guides.

CHAPTER 2

Basic Circuit Descriptions

What types of circuits will you find in imported electronic equipment? Do they operate differently than domestic designs, or are they similar? Actually, the theories of operation are the same as in domestic units of the same type. And, there are some similarities in various equipment, too. For example, the audio stages in an AM transistor radio with a Class B type output function about the same as a Class B output in an AM-FM receiver. This also holds true for an amplifier or tape recorder audio section, except that there are two such stages in a stereo unit. Let's begin our discussion with audio circuit.

AUDIO SECTION

The operation of an audio section is discussed first with reference to the schematic diagram in Fig. 2-1, a 6-transistor AM receiver. The audio section takes in the area from volume control R11 to the speaker. Transistor Q4 is the first audio amplifier and receives its signal from the movable tap on volume control R11, which acts as the detector load. The movable tap simply "picks off" a given amount of audio and couples it through R12 and C10 to the base of Q4. This is an NPN transistor in a common-emitter configuration with the input signal applied between the base and emitter. Bias for the transistor is taken from the junction of the voltage divider network of R15-R16. The base bias voltage is shown as 1.85 while the emitter is at 1.34 volts. This means that the emitter is positive by .51 volts.

From the collector of Q4, the amplified audio is coupled through driver transformer T4 to the bases of audio output power transistors Q5 and Q6. These audio power transistors are operated in Class B push-pull and normally matched, which means that they are selected to be as close to identical as possible in their operating characteristics. This is done to prevent distortion and to be sure both transistors amplify the same amount.

Bias for the output stages is provided by R18 and R19 while R20 is used for stabilization of both transistors. Transistors Q5 and Q6 operate only on alternate half cycles of signal with their conduction cut-off during the other half cycle of signal. The output signal from the push-pull stage is then coupled through an output transformer which is used for matching the impedance of the transistor stage to the relatively low speaker impedance. A closed-circuit type earphone jack is connected in series with the power output transformer secondary. Audio is not fed to the speaker when an earphone is plugged into the jack because a switch in the jack opens the circuit to the speaker voice coil.

There are other types of audio output stages used in radios, hi-fi and TV sets, but the Class B push-pull stage is the most common in foreign import transistor radios. The primary reason for this is that a Class B output provides the most power for the least amount of battery drain.

IF CIRCUITS

The IF (intermediate frequency) in most foreign transistor radios is 455 kHz. The AM radio schematic diagram in Fig. 2-2 has a 2-stage IF system followed by detector diode D1 and the audio amplifier. IF amplifiers are used to boost the incoming signal as well as to provide selectivity. Naturally then, the more IF stages a radio has, the more selectivity and gain it has. Depending upon the receiver, some have a single IF stage while others may use as many as three. However, most foreign transistor radios have two IF stages (three transformers).

As mentioned, the IF is used to provide selectivity as well as gain. Just what is selectivity and why do we need it? In a low-priced transistor radio, selectivity could mean the difference between hearing one station or more than one at the same point on the dial. A radio with good selectivity is one that can reject all except the desired station. So selectivity means a radio's ability to select one specific signal or frequency and reject the others. Selectivity must be broad enough so that a radio is able to reproduce the signals it receives without

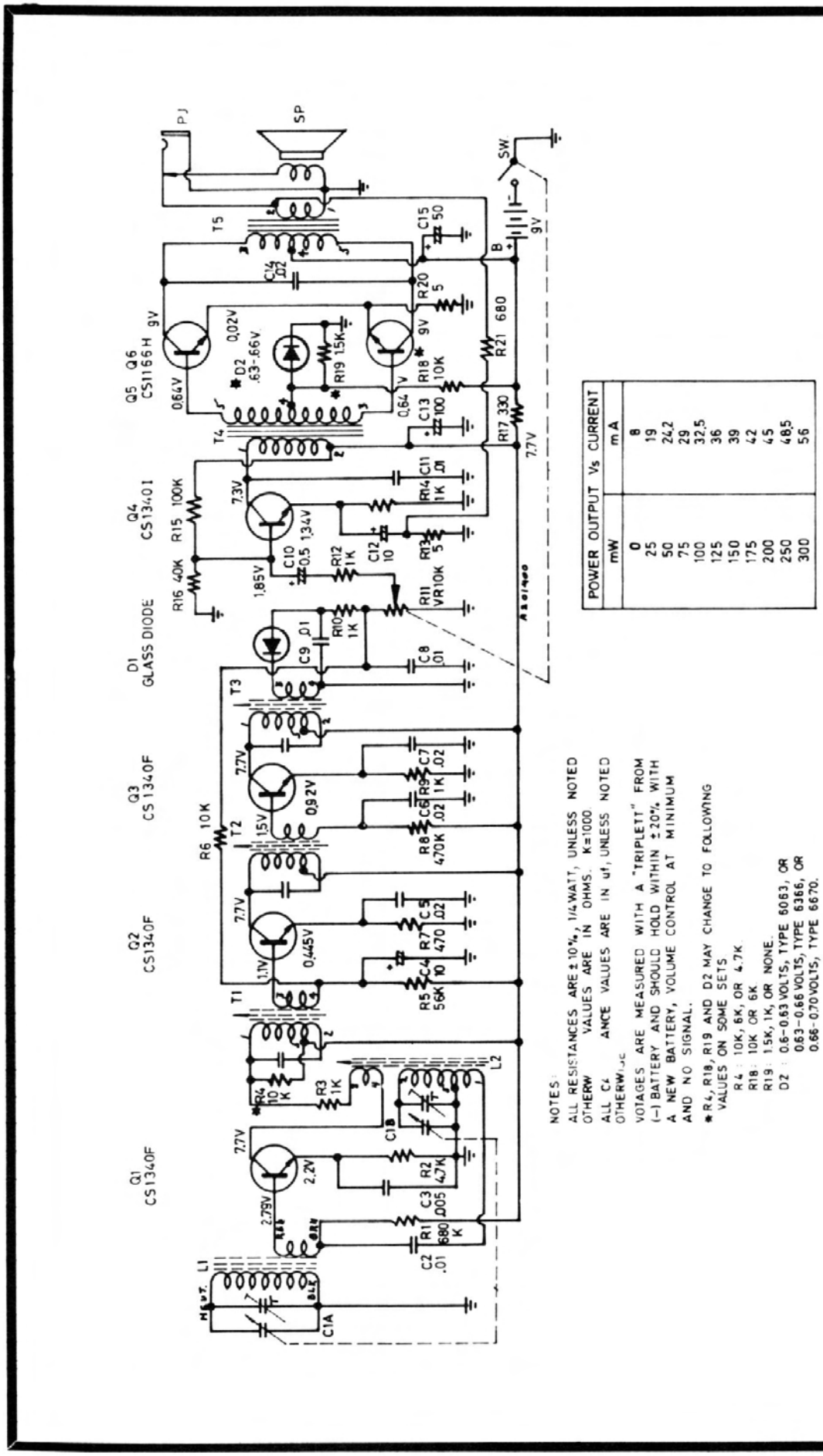

NOTES:

ALL RESISTANCES ARE ±10%, 1/4 WATT, UNLESS NOTED OTHERWISE. VALUES ARE IN OHMS. K=1000

ALL CAPACITANCE VALUES ARE IN uf, UNLESS NOTED OTHERWISE.

VOLTAGES ARE MEASURED WITH A "TRIPLETT" FROM (-) BATTERY AND SHOULD HOLD WITHIN ±20% WITH A NEW BATTERY, VOLUME CONTROL AT MINIMUM AND NO SIGNAL.

* R4, R18, R19 AND D2 MAY CHANGE TO FOLLOWING VALUES ON SOME SETS

R4 : 10K, 6K, OR 4.7K
R18: 10K OR 6K
R19: 1.5K, 1K, OR NONE.
D2 : 0.6-0.63 VOLTS, TYPE 6063, OR
0.63-0.66 VOLTS, TYPE 6366, OR
0.66-0.70 VOLTS, TYPE 6670.

POWER OUTPUT	Vs CURRENT
mW	mA
0	8
25	19
50	24.2
75	29
100	32.5
125	36
150	39
175	42
200	45
250	48.5
300	56

Fig. 2-1. Schematic diagram of an RCA 6-transistor portable AM receiver. (Courtesy RCA)

distortion. This function of selectivity is known as the "bandwidth" of the IF. The IF bandwidth of most foreign transistor portables is probably about 5 kHz (plus or minus) which is normally sufficient for the user's requirements.

The IF circuit shown in Fig. 2-2 consists of T1, TR2, T2, TR3, T3, and associated components. The received signal from converter mixer transistor TR1 is coupled through T1 to the base of the first IF amp transistor, TR2. The first IF amp input and output are both coupled by tuned transformers. C8 neutralizes this stage and provides an inverse feedback circuit between the base and collector. Normally, neutralization is used in a circuit to increase stability and to decrease internal stage noise.

As shown on the schematic, AVC (automatic volume control) voltage is fed from the detector output through R11 to the base of TR2. AVC is used to automatically stabilize the gain of the stage or stages to which it is connected. In this case the AVC voltage controls the emitter current of TR2 by changing the base bias voltage. Since the gain of TR2 decreases with a reduction in emitter current, the increase or decrease of AVC voltage derived from the received signal directly controls the gain of the IF. In other words, if a strong signal is suddenly received over a weak one, the emitter current of TR2 is reduced and thus decreases the stage gain. Naturally, some broadcast signals are stronger than others so AVC is necessary to maintain a somewhat constant output over the broadcast band, depending on the strength of the received signal. The precise method of AVC action shown in this unit is only one of many types used in transistor units, but all AVC systems work on the same basic principal.

DETECTOR - AVC

A broadcast station transmits a signal which is picked up by the receiving antenna. The signal is sent out in the form of a carrier which is modulated by the audio from the program being transmitted.

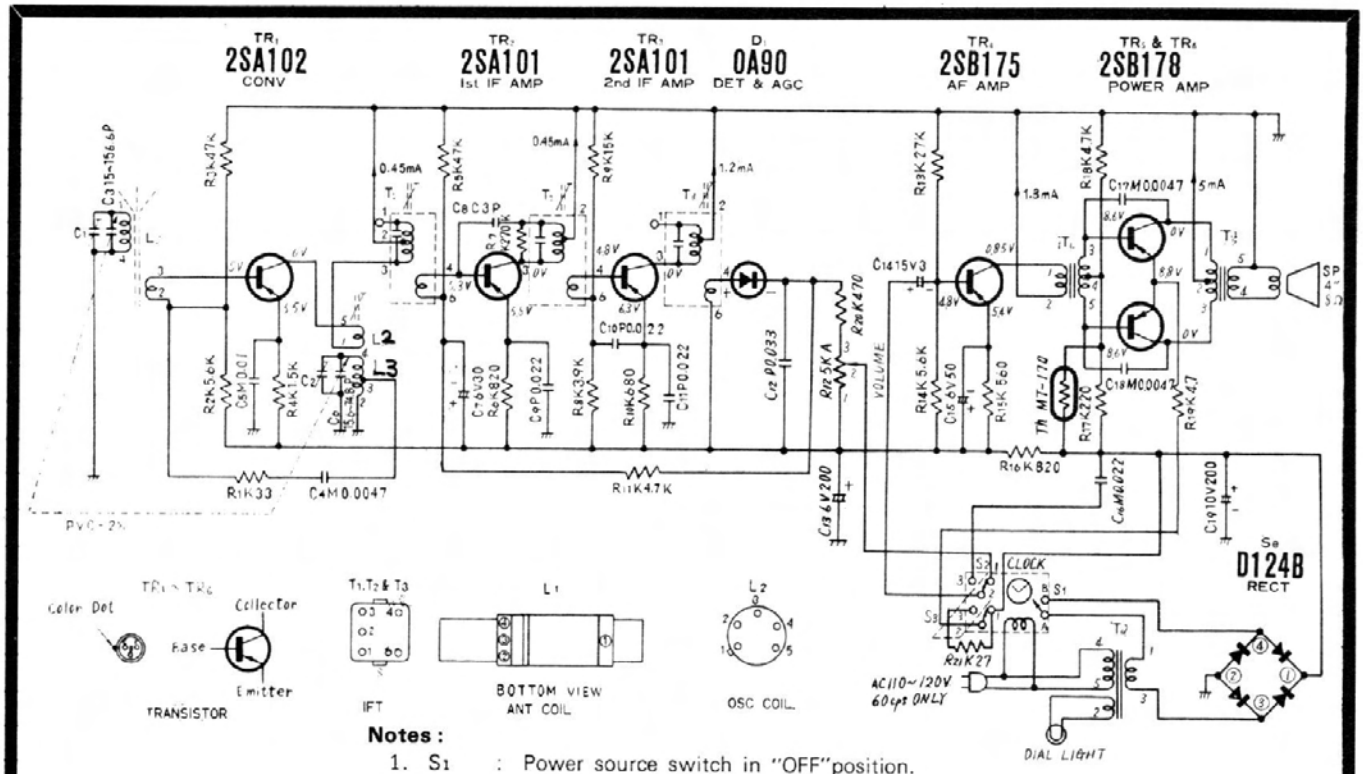

Notes:

1. S1 : Power source switch in "OFF" position.
2. S2, S3 : Clock selector switch in "AUTO" position.
3. DC voltage measurements are taken with circuit tester 10KΩ/volt from chassis ground.
4. Capital letters (M, K, J, P, C, D) in the circuit diagram show allowable tolerance of resistors and capacitors as follows:
   M=±20% K=±10% J=±5% P=+100% −0%
   C=±0.25PF D=±0.5PF
5. P=pico farad=mmf
   μ=micro farad
6. All resistor values in ohms (K=1000Ω).
7. All capacitor values in micro farads (P=μμ).

Fig. 2-2. Schematic diagram of a Penncrest Model 3530 6-transistor AM table model receiver. (Courtesy J. C. Penney Co.)

TRANSISTORS AND DIODES

Schematic Designation	Part Number	Description
TR_1	2SA102	Converter
TR_2	2SA101	1st IF Amplifier
TR_3	2SA101	2nd IF Amplifier
TR_4	2SB175	AF Amplifier
TR_5	2SB178	Power Amplifier (push-pull)
TR_6	2SB178	
D_1	OA90	Detector & AGC

COILS AND TRANSFORMERS

Schematic Designation	Part Number	Description
L_1	RLF-2C25	Antenna Coil
L_2	RLO-2P63-T	Oscillator Coil
T_1	RLI-2C151-T	1st IF Transformer
T_2	RLI-2C250-T	2nd IF Transformer
T_3	RLI-2C451-T	3rd IF Transformer
T_4	RLT-3F32-G	Input Transformer, P=3KΩ ; S=3KΩ
T_5	RLT-2F37-G	Output Transformer, P=200Ω ; S=8Ω
T_6	RLT-5J21-G	Power Transformer

THERMISTOR AND RECTIFIER

Schematic Designation	Part Number	Description
Th	MT-170	Temperature Compensator
Se	D124B	Selenium

CAPACITORS

Schematic Designation	Part Number	Description
C_3, C_6	PVC-2X	Tuning Gang, W/Trimmer (C_1, C_2)
C_4	ECK-D05472MY	Ceramic 0.0047mfd, ±20%
C_5	ECK-D05103MY	Ceramic 0.01mfd, ±20%
C_7	ECE-A6V30	Electrolytic 30mfd, 6V
C_8	ECC-D05030C	Ceramic 3mmf ±0.25pf
C_9	ECK-D05223P	Ceramic 0.022mfd, +100% − 0%
C_{10}	ECK-D05223P	Ceramic 0.022mfd, +100% − 0%
C_{11}	ECK-D05223P	Ceramic 0.022mfd, +100% − 0%
C_{12}	ECK-D05333P	Ceramic 0.033mfd, +100% − 0%
C_{13}	ECE-A6V200	Electrolytic 200mfd, 6V
C_{14}	ECE-A15V3	Electrolytic 3mfd, 15V
C_{15}	ECE-A6V50	Electrolytic 50mfd, 6V
C_{16}	ECQ-G05223MZ-N	Polyester 0.022mfd, ±20%
C_{17}	ECQ-G05472MZ-N	Polyester 0.0047mfd, ±20%
C_{18}	ECQ-G05472MZ-N	Polyester 0.0047mfd, ±20%
C_{19}	ECE-A10V200	Electrolytic 200mfd, 10V

RESISTORS

Schematic Designation	Part Number	Description
R_1	ERD-14VK 330	Fixed, Carbon Film 33Ω, ±10%
R_2	ERD-14VK 562	Fixed, Carbon Film 5.6KΩ, ±10%
R_3	ERD-14VK 473	Fixed, Carbon Film 47KΩ, ±10%
R_4	ERD-14VK 152	Fixed, Carbon Film 1.5KΩ, ±10%
R_5	ERD-14VK 473	Fixed, Carbon Film 47KΩ, ±10%
R_6	ERD-14VK 821	Fixed, Carbon Film 820Ω, ±10%
R_7	ERD-14VK 274	Fixed, Carbon Film 270KΩ, ±10%
R_8	ERD-14VK 392	Fixed, Carbon Film 3.9KΩ, ±10%
R_9	ERD-14VK 153	Fixed, Carbon Film 15KΩ, ±10%
R_{10}	ERD-14VK 681	Fixed, Carbon Film 680Ω, ±10%
R_{11}	ERD-14VK 472	Fixed, Carbon Film 4.7KΩ, ±10%
R_{12}	EVC-B0AL30A53	5KΩ (A), Volume Control
R_{13}	ERD-14VK 273	Fixed, Carbon Film 27KΩ, ±10%
R_{14}	ERD-14VK 562	Fixed, Carbon Film 5.6KΩ ±10%
R_{15}	ERD-14VK 561	Fixed, Carbon Film 560Ω, ±10%
R_{16}	ERD-14VK 821	Fixed, Carbon Film 820Ω, ±10%
R_{17}	ERD-14VK 221	Fixed, Carbon Film 220Ω, ±10%
R_{18}	ERD-14VK 472	Fixed, Carbon Film 4.7KΩ, ±10%
R_{19}	ERD-14VK 4R7	Fixed, Carbon Film 4.7KΩ, ±10%
R_{20}	ERD-14VK 471	Fixed, Carbon Film 470Ω, ±10%
R_{21}	ERD-14TK 270	Fixed, Carbon Film 27Ω, ±10%

Fig. 2-3. Parts list for the Penncrest Model 3530 AM radio in Fig. 2-2. (Courtesy J. C. Penney Co.)

This audio could be an announcer's voice, your favorite music or what have you. Whatever it is, the audio information must be extracted or "detected" from the signal in order for it to be amplified and fed through a speaker so it can be heard.

Diode D1 (Fig. 2-2) does the job of "detection" and also supplies the AVC voltage. The signal from the IF stages is fed through T3 to D1. The diode detector rectifies the IF signal, charging up C12 to a voltage that is approximately proportional to the strength of the IF signal. This voltage or charge on C12 is the DC voltage used for AVC. Since the IF signal is modulated by voice or music, the voltage or charge on C12 varies in proportion to the rectified audio modulation. This "audio" voltage is applied across diode load resistor R12. R12 is the volume control which picks off a given amount of this voltage and feeds it to the audio amplifiers.

In the meantime, the AVC voltage is filtered (becoming a steady DC voltage) by R11 and C7 before it is applied to the first IF stage, otherwise the gain of the IF would flucuate up and down in step with the mdoulation. An open C7 in a transistor radio generally causes a loss of gain or "motorboating."

CONVERTER CIRCUITS

A converter circuit is actually a combination mixer and oscillator (Fig. 2-2). Antenna coil L1 picks up the broadcast signals. C3 and C6 are "ganged" (mechanically linked) as shown by the dotted lines. These are the variable tuning capacitors tied to the radio dial to select the desired frequencies. The desired broadcast signal is coupled through L1 to the base of TR1 for amplification. L2 (another coil in the collector of TR1) is in series with the collector and couples part of the amplified signal to L3. Remember, C3 and C6 are ganged to provide simultaneous tuning of the antenna and oscillator resonant circuits. The RF signal in the L3-C6 circuit is then coupled back to the base of TR1 through C4 and R1. The antenna and oscillator signals then combine at the base of TR1 to provide "mixer" action and produce the IF difference signal of 455 kHz which is coupled to the base of TR2 through T1. Actually, there are four signals at the output of TR2: the RF signal, the oscillator signal, the sum of these two signals (combined in TR2), and the difference between the two preceding signals. The IF transformer is tuned to pass the difference between these two signals which is, of course, the 455 kHz IF signal. The IF of 455 kHz stays the same because the tuning capacitors are mechanically linked, maintaining the antenna and oscillator circuits at the same difference frequency all across the dial.

AM-FM RECEIVERS

An AM-FM receiver is actually two receivers in one chassis sharing a common power supply, audio section, and speaker. Fig. 2-4 is the schematic diagram of an AM-FM 10-transistor receiver. The AM portion of this receiver includes AM converter stage Q6, IF amplifiers Q3 and Q4, plus the audio section. AM operation is selected by bandswitch SW1 which applies power to the AM converter stage and also allows the AM signals to be fed to the IF and audio sections. Q3 and Q4 are also FM IF amplifiers.

FM operation (SW1 in the FM position as shown) is provided by Q1 and Q2 along with the same IF audio and power supply sections used for AM. The incoming FM signal at TP1 is coupled to FM-RF amplifier Q1. The object of the FM-RF stage is to provide good image rejection without sacrificing bandwidth, to provide a satisfactory low noise figure, and be able to handle a wide range of input signal levels. The AGC (automatic gain control) action of the receiver is designed to handle the variations in input signal strength. (AGC and AVC are used interchangeably in radio terminology).

The FM RF circuit, consisting of Q1 and its associated components, is operated in a common-base configuration in which the input signal is applied between emitter and base. The output is taken from across collector load L2, which is connected between the collector and base. The common-base circuit has a relatively low input impedance and a relatively high output impedance. FM tuning is accomplished by ganged tuning capacitors VC1 and VC2. The same dial also tunes the AM receiver section, only now tuning capacitors VC3 and VC4 determine station selection. VC1, VC2, VC3, and VC4 are linked to one shaft so they all rotate at the same time. They are switched electrically to the circuit in use at the time.

Transistor Q2 is used as an FM oscillator and converter (mixer) stage which provides an output signal at 10.7 MHz. The amplified signal from Q1 is fed to the emitter of Q2 through C6. Q2 is also a common-base connected circuit. Depending on the setting of tuning capacitor VC2, the transistor circuit oscillates at 10.7 MHz (the IF) above the received RF signal. The transformer in the collector circuit of Q2 is tuned to this IF signal and couples it to the base of Q3. (Diode D1 is an overload limiter for high-level input signals, such as when the radio is used near a broadcast station.) The signal is amplified and coupled through FM IF transformer IFT-2 to the base of Q4. The IF amplification continues through Q5 which feeds the FM signal to an FM discriminator transformer IFT-5. The output of IFT-5 is connected to FM ratio detector diodes D4 and D5 to provide an audio signal at the junction of R21 and C34. From here, the audio is fed to function selector switch SW1 where it is then coupled to the audio amplifier stage through volume control VR1. Fig. 2-5 is another representation of an AM-FM radio schematic.

TAPE RECORDERS

There are a number of different kinds of tape recorders on the market today, designed for almost

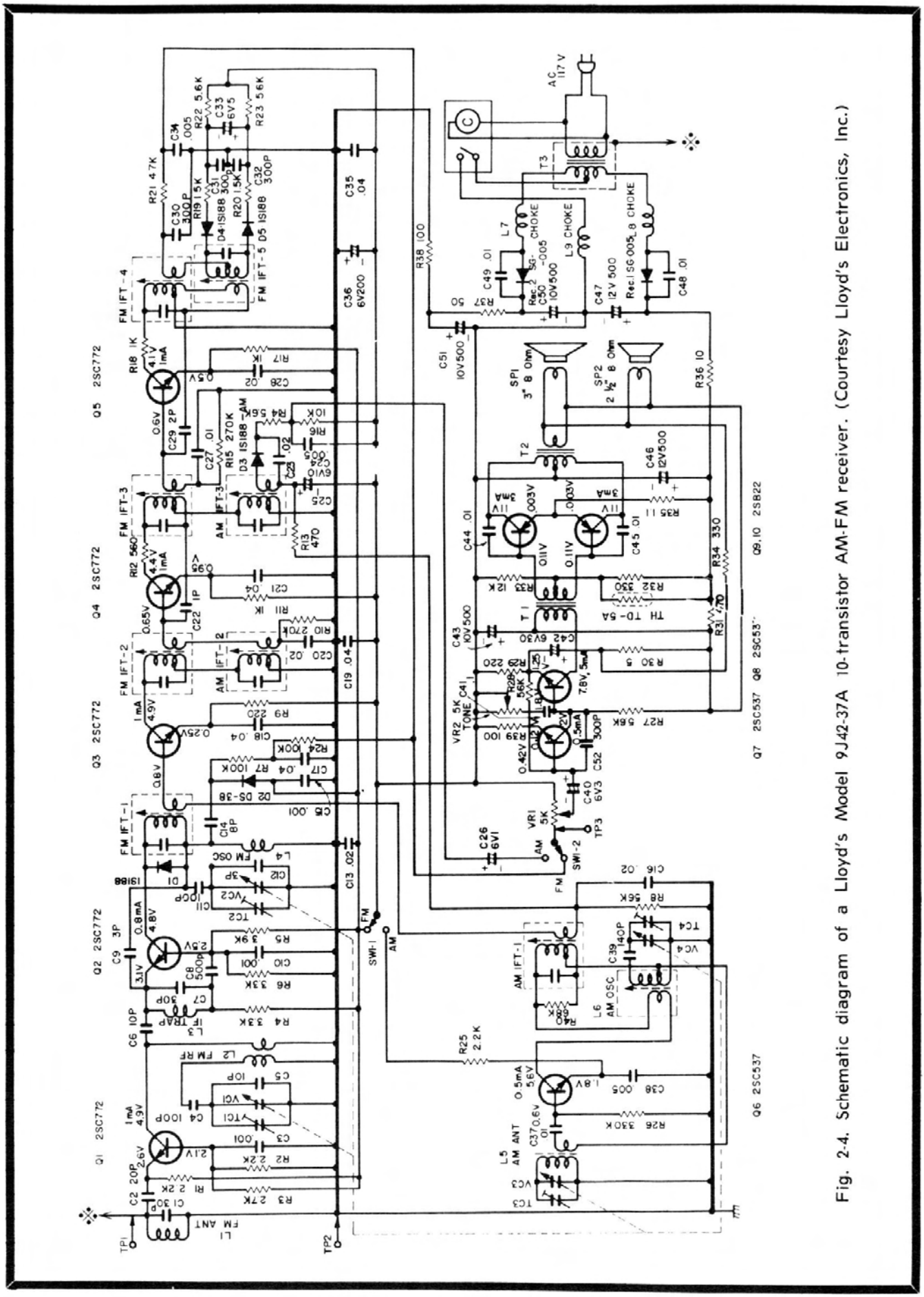

Fig. 2-4. Schematic diagram of a Lloyd's Model 9J42-37A 10-transistor AM-FM receiver. (Courtesy Lloyd's Electronics, Inc.)

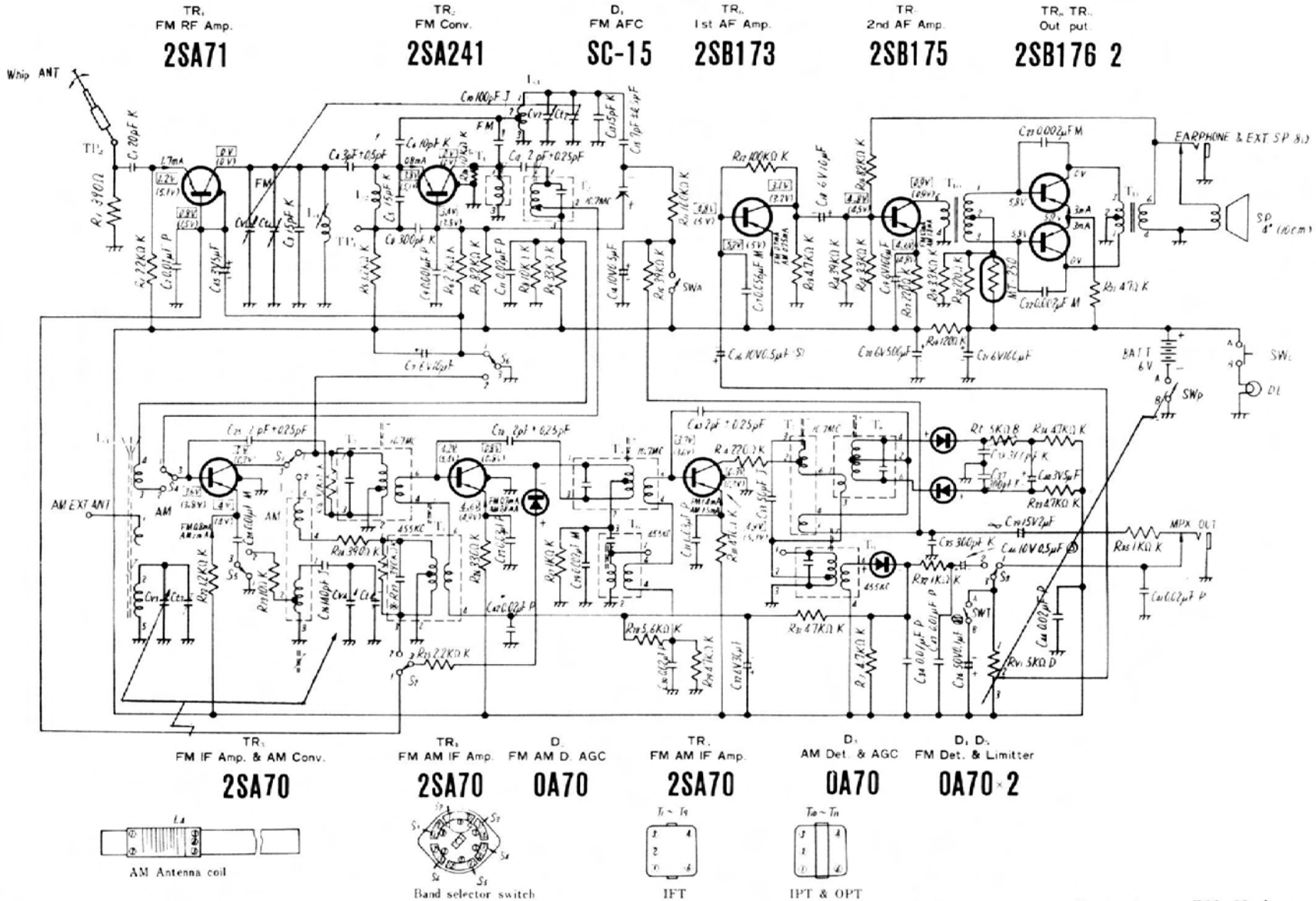

Fig. 2-5. Schematic diagram of a Panasonic Model RF-835 9-transistor AM-FM portable. (Courtesy Matsushita Electric Corp. of America)

Notes:

1. $S_1 \sim S_{11}$: Band selector switch in "FM" position.
2. SWt : Tone switch in "H" position.
3. SWa : AFC selector switch in "OFF" position.
4. SW_1 : Dial lamp switch in "OFF" position.
5. Voltage measurements are under no signal conditions taken with a 10KΩ/Volt voltmeter and are positive with respect to ground.
   [ ].....FM position. ( ).....AM position.
6. Battery current : No signal FM 26mA, AM 23mA
   Maximum FM AM 130mA
7. Capital letters (M,K,J,P,M,S) in the circuit diagram show allowable deviations of resistors and capaeisors as follows.
   M.....± 20% K .....±10% J.....± 5%
   P .....+100% −0% K .....+30% −10% S ..... +40% −10%
8. PF = pico farad = mmf
   μF = micro farad = MF



Fig. 2-6. Allied Model TD-1030 tape recorder, a reel-to-reel unit. (Courtesy Allied Radio Corp.)

every consumer need. Thankfully, the circuits are not as varied as the models. Several popular types shown in the accompanying photos are the reel-to-reel tape deck in Fig. 2-6 (with or without built-in playback amplifiers), the cassette player, cassette recorder, and a cassette recorder with a built-in AM-FM radio (see Figs. 2-6 through 2-9).

The schematic diagram in Fig. 2-10 shows a typical 5-transistor battery-operated cassette recorder. As shown on the schematic, it has a playback/record head (PRH) and an erase head (EH). A choice of two input jacks is provided for recording from either a mike or an auxiliary source with a selection of either the internal speaker or auxiliary speaker operation. The unit also provides for remote operation and for an external power source.

The transistorized portable cassette recorder circuit shown in Fig. 2-11 illustrates a slightly different type of unit which features a built-in AC supply so it can be used on either battery or line power. The circuit works like this: A common system is used for both record and playback depending on the position of switch SW1. The schematic shows this switch in the playback mode. In the recording position, transistors TR1 and TR2 are used as microphone preamplifiers. The recording equalization circuit consists of the negative feedback loop of R12, C22, and the series resonant circuit combination of C11 and the 5 millihenry peaking coil. This circuit, along with R32 and C15 (in series with RPH) provides the high-frequency pre-emphasis necessary for recording.

The signal from the microphone or auxiliary input jack passes through volume control VR1. From here, the signal is fed to the base of pre-driver or preamplifier TR3. The output from the collector of TR3 is coupled through C9 to the base of driver stage TR4 for further amplification. The signal from the driver is coupled through transformer T1

to the bases of push-pull audio amplifiers TR5 and TR6. There are two thermistors used in this circuit to insure bias stability with temperature changes. Thermistors TH1 and TH2 and emitter resistors R29 and R30 help maintain good circuit stability. Negative feedback is taken from the junction of C12 and R29 and fed back through variable resistor VR3 to the emitter of driver transistor TR4. Meanwhile, the record head (RPH) is coupled through R33) and the boost network consisting of R32 and C15 mentioned earlier. The bias oscillator transistor is TR7 in a Hartley oscillator circuit. The bias oscillator develops and generates an ultrasonic signal which is used to magnetically bias the tape head during recording. THHE RECORD BIAS IS COUPLED FROM OSCILLATOR COIL L1 through capacitor C16 and bias adjustment resistor VR2 to the record head. The erase head is connected through R31 and function switch SW1 (contacts #5) to the battery supply and also has direct current running through it.

The record level meter (called "indicator" on the schematic) receives its own power through D1 and R37 from the audio output stage during record. When the recorder is in the playback position, the meter acts as a battery condition indicator through R36 and contacts #5 on SW1.

When the function switch is in the playback mode of operation, TR1 and TR2 are connected as a playback preamplifier to the play/record head. The bass boost circuit for playback is provided by the negative feedback loop consisting of R11 and C14 through SW1 (contacts#2). Resistor R17 is used to shunt the peaking network during playback and the push-pull audio stage now supplies power to the speaker. Bias oscillator circuit TR7 is also disabled during playback through contacts #5 on SW1.

TRANSISTOR PORTABLE TELEVISION CIRCUITS

A typical import transistorized television is shown in Fig. 2-12, Panel A, foldout section. This unit is a portable AC-DC set which operates from a 12-volt DC battery supply or from the 120-volt AC line. The power supply section consists of the input power transformer and selenium rectifier module D67. The APF transistor stage is an active power filter circuit for stabilization of the DC power



Fig. 2-7. Automatic Radio Model CPR-9614 portable cassette recorder. (Courtesy Automatic Radio)

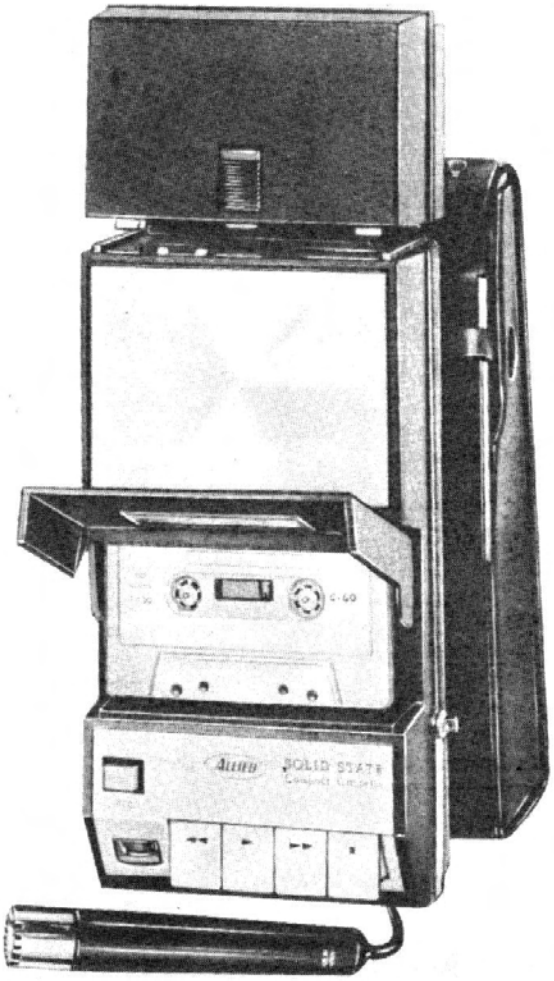

Fig. 2-8. Allied Model 1100 AC-DC portable cassette recorder. (Courtesy Allied Radio Corp.)

source. The APF circuit is adjusted to insure that the B-minus voltage is at 12.2 volts negative. Variable resistor VR51, located on the audio circuit board, is set for 12.2 volts negative DC by connecting a meter between the B-minus supply line and the chassis.

Fig. 2-12 (Panel A, foldout) illustrates the VHF and UHF tuners in block form with proper labeling to show the various circuit connections; the schematic diagrams appear in Fig. 2-13. The VHF signal from the rod antenna is coupled through the proper coil-capacitor network, determined by the channel selector, and fed to the base of RF amplifier TR1. The output of TR1 is coupled to the base of mixer TR2 which also receives a signal from VHF oscillator TR3. The mixer combines the received RF signal from TR1 with the oscillator signal from TR3 to produce the IF signal which is then fed to the first video IF amp TR11 through a coaxial cable. All of this takes place when the VHF tuner is set on a VHF channel. When the VHF tuner is set to the UHF position, switch contacts apply B-minus voltage to the UHF tuner and connect the VHF tuner input to the UHF output. Now, the UHF tuner selects the incoming TV signal. The incoming UHF signal from the 300-ohm antenna is coupled to the UHF diode mixer (D5) which also receives a signal from UHF oscillator TR4. The mixed signals are then fed to the VHF tuner input where they are amplified and fed to the IF strip. (Notice that the VHF tuner oscillator is off in the UHF position, so the VHF tuner simply is an additional IF amplifier.) The IF signal output from the tuner contains all of the video (picture information) as well as the audio.

Referring back to Fig. 2-12 (Panel A, foldout), the IF signal from the tuner is fed to the video IF amplifier circuit board through a shielded cable.

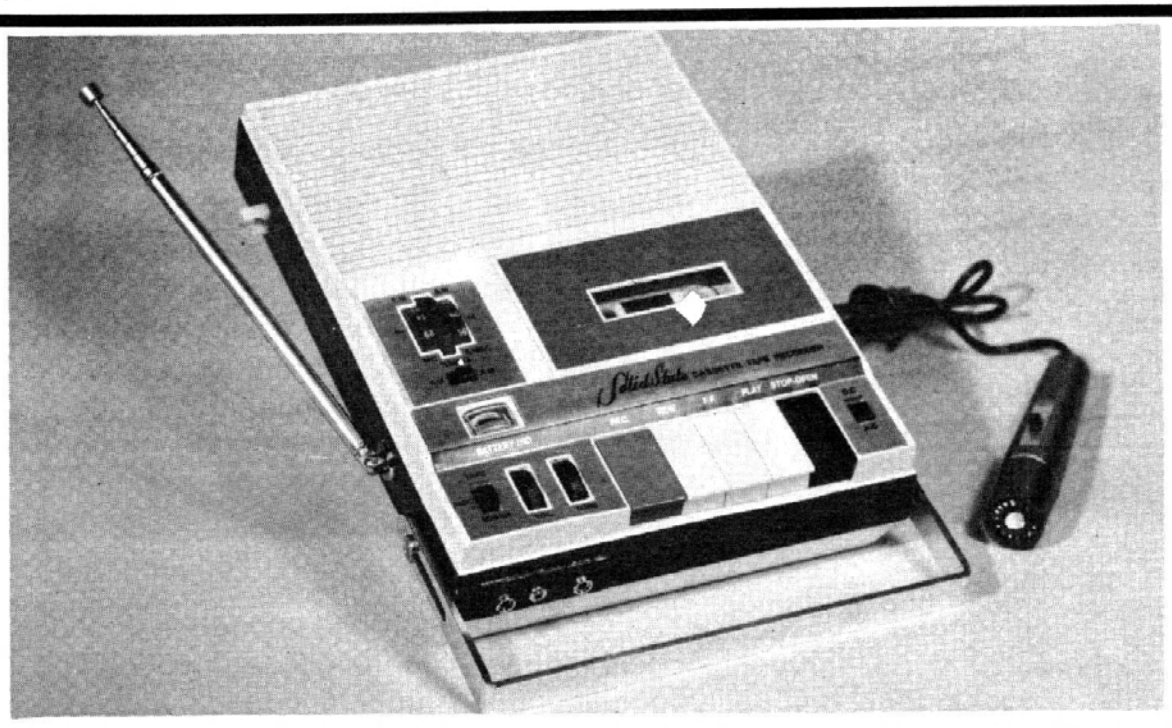

Fig. 2-9. Model CRFM-450 push-button cassette recorder with built-in AM-FM radio. (Courtesy Peerless Telerade)

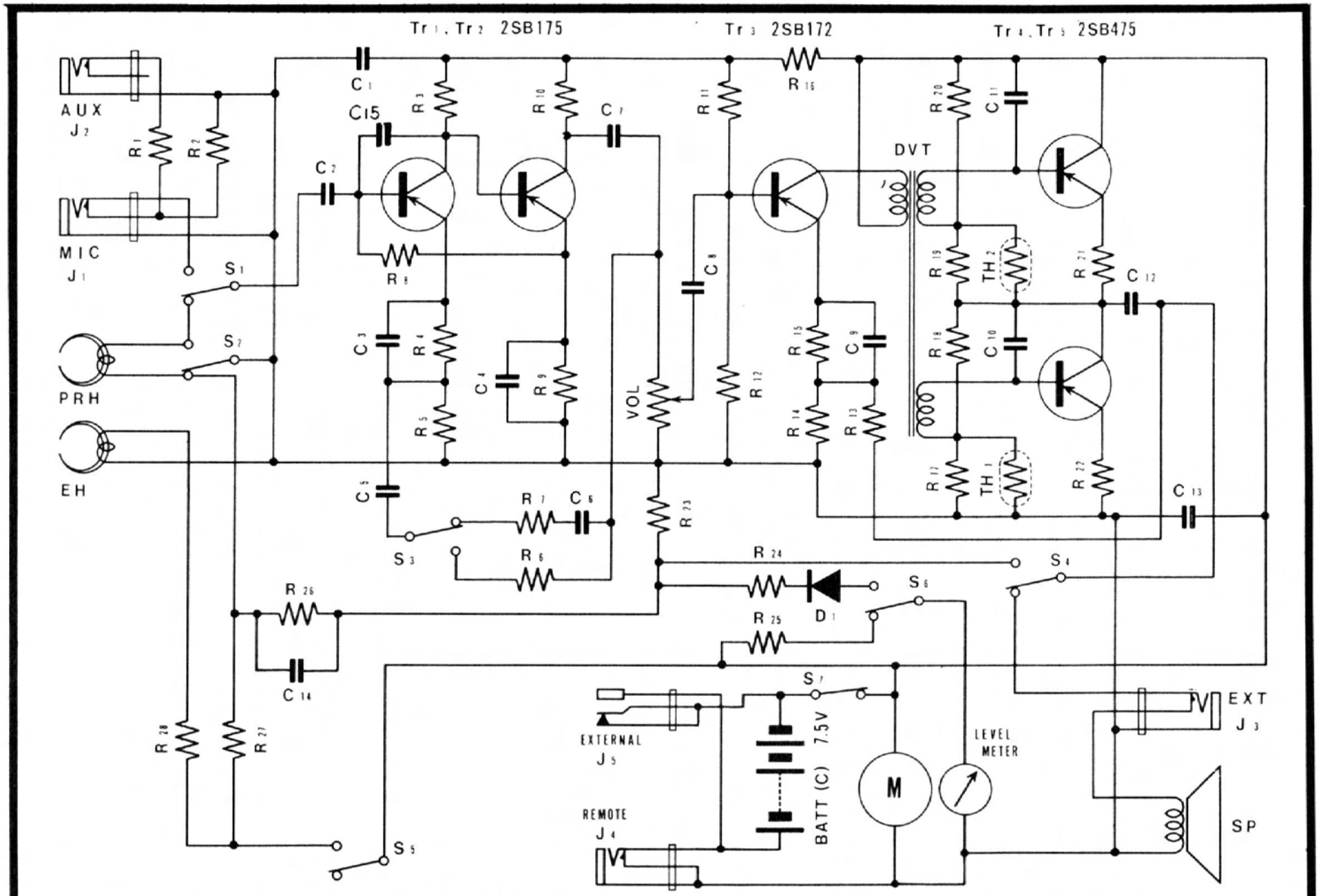

Fig. 2-10. Schematic diagram of the Channel Master Model 6305 cassette recorder. (Courtesy Channel Master)

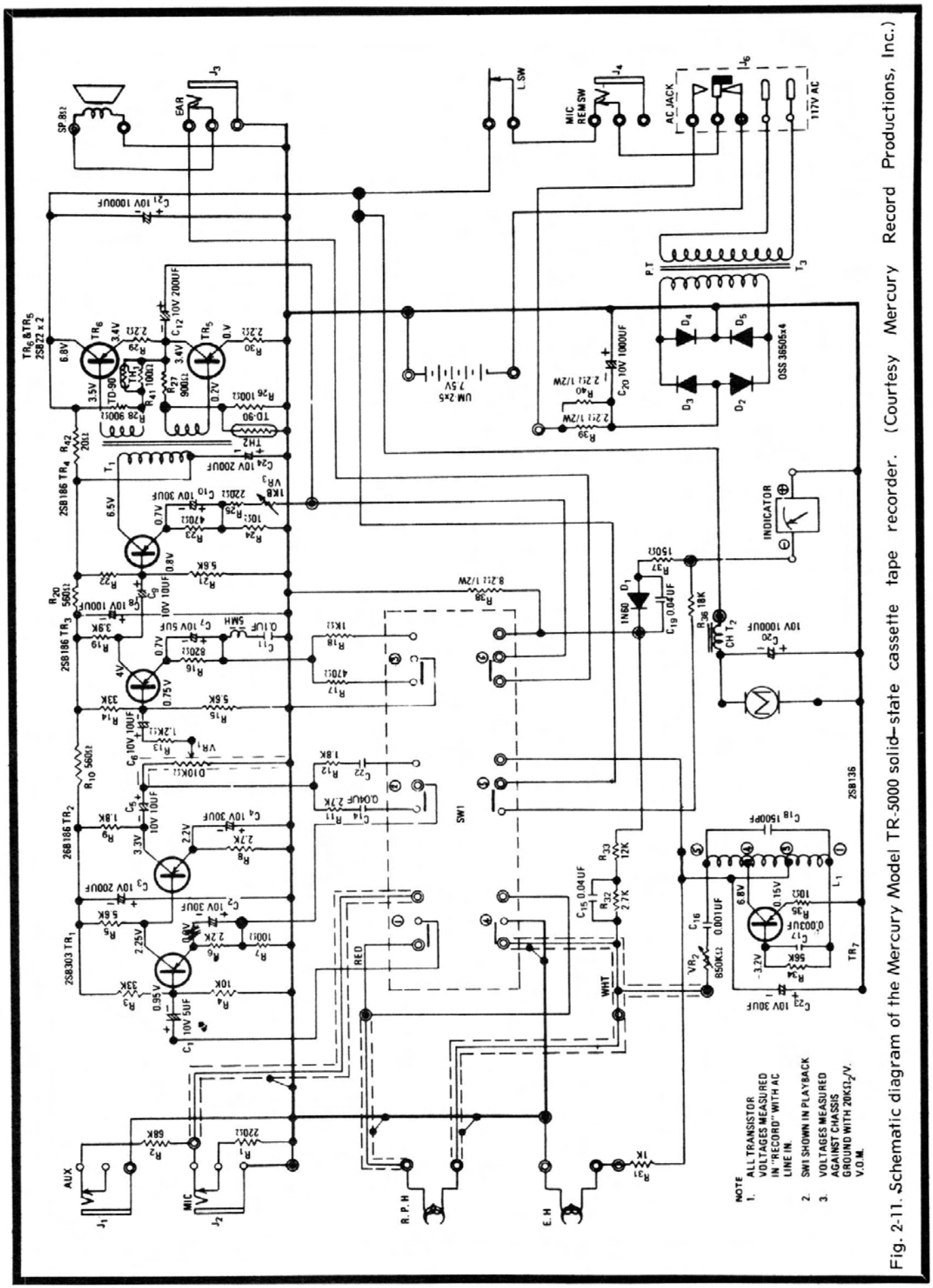

Fig. 2-11. Schematic diagram of the Mercury Model TR-5000 solid-state cassette tape recorder. (Courtesy Mercury Record Productions, Inc.)

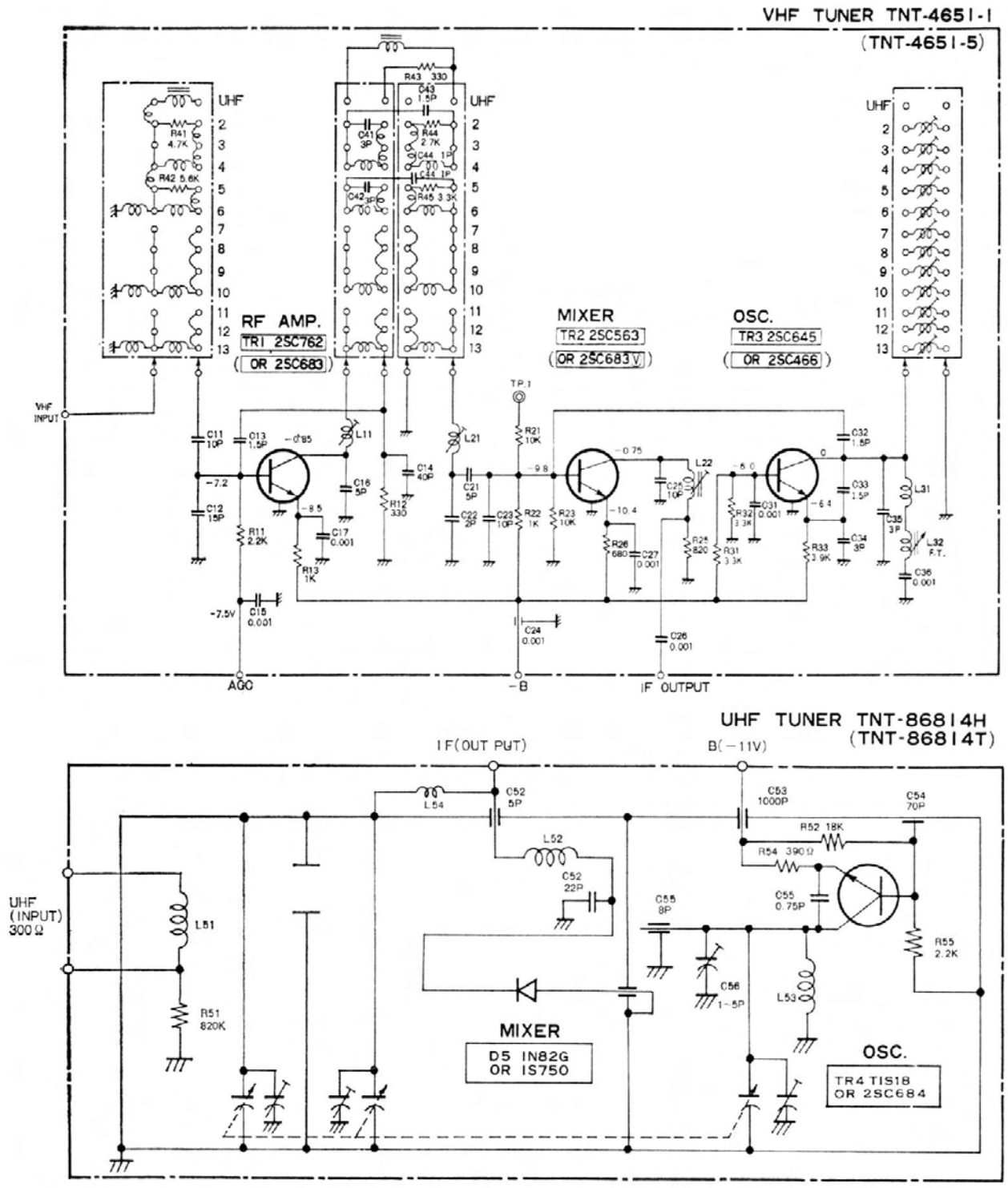

Fig. 2-13. Schematic diagrams of the VHF and UHF tuners used in the J. C. Penney Model 1314B-89. (Courtesy J. C. Penney Co.)

The signal is coupled to the base of first video IF amplifier TR11 and further amplified by TR12 and TR13. The video information is detected by video detector diode D12 and is coupled through a series of LC networks to the base of video amplifier TR14. The LC networks are provided to eliminate the IF carrier, leaving only video and sound. The audio signal (4.5-MHz beat between video and sound carriers) at the collector of TR14 is fed to sound IF amplifier TR12 through sound take-off transformer L201. From the sound IF amplifier, the signal is coupled to discriminator diodes D21 and D22 for audio detection. Audio is then fed through volume control VR61 to the base of first audio amplifier TR51. Further amplication is provided by the audio output stages and then fed to the speaker through a normally-closed earphone jack. When an earphone is used, the speaker is disconnected.

Back to our video signal at TR14. This stage also operates as an emitter-follower circuit and feeds the amplified video information at the emitter to the base of the video output transistor. The emitter output of TR14 also provides sync voltage to the base of sync separator TR17, noise voltage to the noise canceler TR16, and AGC voltage to AGC amplifiers TR18 and TR19. The 4.5-MHz trap in the emitter circuit of TR14 eliminates sound interference in the picture. The video signal at the base of TR15 is amplified and applied to the cathode of the picture tube.

Sync separator transistor TR17, along with sync amplifier TR31, is used for synchronizing horizontal and vertical oscillators TR41 and TR32, respectively. The video signal, with sync pulses at the emitter of TR14, is coupled through R171 and C131 and the RC network of R181 and C182 to the base of TR17. The output of the sync separator is then fed to sync amplifier TR31. The vertical and horizontal sync signals at the output of the sync amplifier is described later in the descriptions of the vertical and horizontal circuits. As mentioned earlier, AGC voltage is also taken from the emitter of TR14 and coupled to the base of AGC amplifier TR18. The AGC voltage is used to control the gain of the first video IF amplifier. A second AGC amplifier, TR19, samples the change in the video IF collector voltage and the collector voltage of TR19 then supplies RF AGC voltage.

The vertical oscillator is turned on during retrace time and off during the vertical scanning time. The vertical scanning time, or the time that TR32 is turned off, is adjusted by vertical hold control VR65, along with C313, R314, and R315. TR32 turns on only at the time when its base voltage is lower (more negative) than that of its emitter. The output of TR32 is amplified in TR33 and TR34, the vertical output amplifier. From TR34, the vertical signal is coupled to the deflection yoke through C219. This amplified sawtooth voltage from TR34 causes a sawtooth of current in the yoke, which results in a linear sweep from top to bottom on the picture tube.

Referring back to the sync amplifier again, horizontal sync pulses are coupled from the output of TR31 to the horizontal AFC circuit. In this unit, the AFC circuit consists of D41 and D42. Since horizontal sync pulses are taken from both the emitter and collector of TR31, they are equal and out-of-phase and can be applied directly to the AFC circuit for comparison with the horizontal output signal. The AFC circuit develops an "error" voltage in proportion to the frequency or phase variation between the input sync and the horizontal sweep voltage. This error control voltage is then fed to the horizontal oscillator to bring the horizontal output back on frequency. If there is no error, there is no voltage output from the AFC detector.

Horizontal oscillator TR41 produces pulses at a frequency of 15,750 Hz used to provide horizontal sweep. L402 is the horizontal oscillator coil. From here the horizontal waveform is applied to horizontal driver stage TR42, where it amplifies and shapes the waveform for driving horizontal output stage TR61. The horizontal output stage is a grounded-collector circuit and feeds the yoke through C415 and horizontal width coil L404. The flyback transformer circuit also connects to the emitter circuit of TR61. The width coil is used in series with the deflection yoke to adjust for sufficient horizontal scan.

The horizontal output circuit starts to conduct about half way through the sweep cycle, providing a linear increase in current for the rest of the sweep. At the end of the sweep, the circuit is suddenly shut off, which produces the flyback pulse action and retrace. The energy stored in the damper circuit provides the first half of the horizontal sweep. The high voltage is produced by the rectifier action of D64, a 1X2B, on the flyback pulse which is stepped up to a high voltage by T601. DR62 supplies voltage used by the CRT screen and focus anodes. D63 supplies 85 volts positive for the video amplifier collector voltage, along with D65. D61 is the damper diode.

CHAPTER 3

Servicing Procedures

The one thing that makes an individual stand out as a knowledgeable technician is a logical approach to the service problem in front of him. If a radio is brought in with the complaint of having no audio, he should first check the unit to verify the problem. This means more than just turning it on and off. Turn the volume back and forth as well as the tuning dial. Listen for any signs of audio or intermittent reception. In other words, check it out. Don't jump to a quick conclusion based on what the customer says is wrong with the unit.

Another general rule is to give the radio, TV, or whatever, a thorough visual inspection. Look for the obvious first, like an open fuse, burned resistors, broken wires, bent contacts, or any outward physical damage that might give you a lead. There is another point sometimes overlooked which is definitely worth mentioning, especially when servicing any tunable equipment such as a radio or TV, and that is to ask the customer if anyone else has worked on the set. Many times a customer tries to fix it himself, gives it to the neighbor to work on, or has a relative in the dry cleaning business who is an "expert" electronics repairman. By the time you get it the IF coils might be so far out of whack that you couldn't drive a signal through them with an atomic-powered truck. Of course, the customer may not always give you the right answer, due to the obvious embarassment of answering that question, so you will just have to find out the hard way. However, if it appears to have been tampered with, make a note to watch out for it next time.

Back to our logical and practical operating check to find out what is really wrong. Many times the unit itself can help to isolate a problem to a certain area. In portable battery-operated equipment, such as an AM radio for example, it is a good idea to find out first if the battery is up to par. This is especially true if the radio is dead. Naturally, you will want to check to see that the batteries have been correctly installed and that the connections are not damaged. Radios powered by flashlight type batteries are normally marked with the proper polarity, but then we can all make mistakes so watch for this, too. Other units powered by batteries using the snap-on type connector sometimes suffer from a case of broken wires on the flexible connector. Of course, AC-powered equipment such as a TV or hi-fi set often is fused. Be sure to check.

Another test that can save time in a radio with no apparent output is to try the earphones. Sometimes a defective earphone jack or speaker causes one or the other to short out. It's a quick check that can save a lot of useless digging. In our logical sequence of troubleshooting, we want to nail the problem down to a particular thing such as lack of audio, background noise but no signals, etc. Once the particular symptom is recognized you can get to the process of isolating the problem to a single component. This means the use of your brains and various test instruments. Let's consider some of the types of problems you might run into and the methods of isolating a problem to a particular component.

LOCATING THE TROUBLE

We covered a few of the preliminary problems of a dead receiver, now let's talk about locating some of the most common complaints beginning with audio. (Fig. 3-1 shows a component view of an AM-FM radio with all connections visible.) Audio, of course, is what we hear out of the radio, TV, or hi-fi set's speaker. We all have our own idea of how loud it should be, as well as how well it should sound. And most of us are pretty well aware when a receiver has low audio output or distortion. In a unit that has no audio, one of the quickest tests is the old wet-finger on-the-volume-control check. Simply touching the volume control with your finger causes an unmistakeable hum in the speaker if there is audio amplification. This may not happen if the unit is battery-operated because you may not pick up enough AC signal to cause the hum or buzz. In this case, grasp a screwdriver blade and grate it across the terminal–you should here pops and cracks in the output. If you get no hum indication, check for open

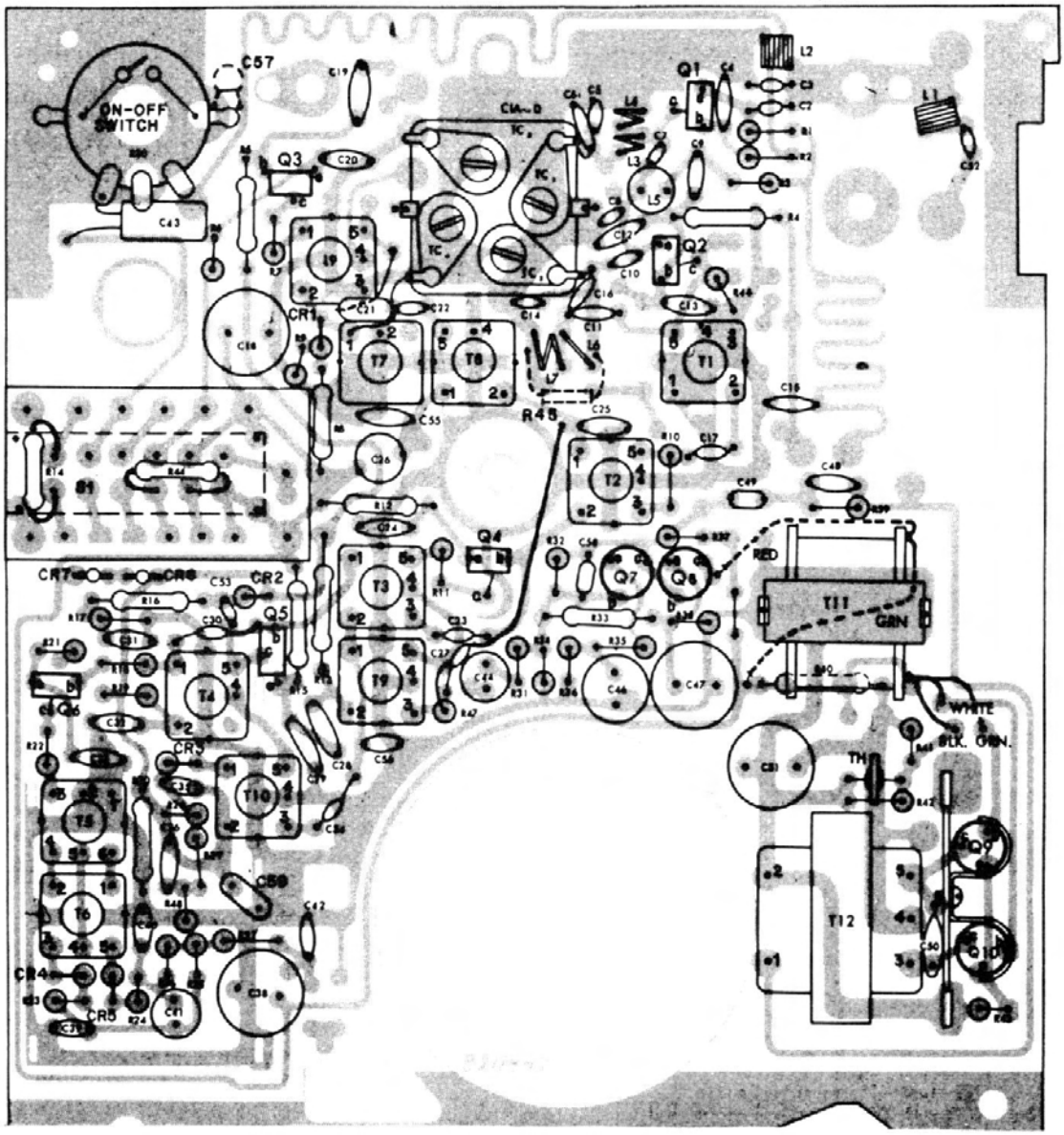

Fig. 3-1. This component layout drawing shows the top view of an RCA Model RZM174 AM-FM radio with all connections for easy servicing. (Courtesy RCA)

speaker leads or, as suggested earlier, try the earphone jack. Don't overlook bent contacts which might short out the speaker. If these quickie type tests prove to be blanks, then it's time to try a little signal tracing using an audio generator. The use of a generator is most helpful in finding very weak stages as well as distortion.

An RF/audio generator is a common piece of test equipment useful in troubleshooting both tube and transistor circuits. However, since we are concerned mainly with transistor circuits, and especially those of foreign manufacturers, a word of caution: if you have no schematic and you are not sure where the common ground point is, check to see where the IF cans and tuning capacitor are mounted on the printed board. These points are normally at common ground (either positive or negative). Another little hint concerning transistors which helps if a schematic is not available; if you are not sure whether the transistors are PNP or NPN, remember that an NPN transistor always operates with the emitter more negative than the base or collector. The base voltage usually is less negative than the emitter by the amount of the bias (somewhere between 0.5 and 0.75 volts for silicon transistors, about 0.1 to 0.2 for germanium types). A PNP transistor, on the other hand, operates with the emitter more positive than the base or collector. Again, the voltage difference between the base and emitter is the amount of the bias.

Before connecting any test equipment to a transistorized radio or anything else transistorized, there are a couple of things to keep in mind. First of all, use an isolation transformer between the AC

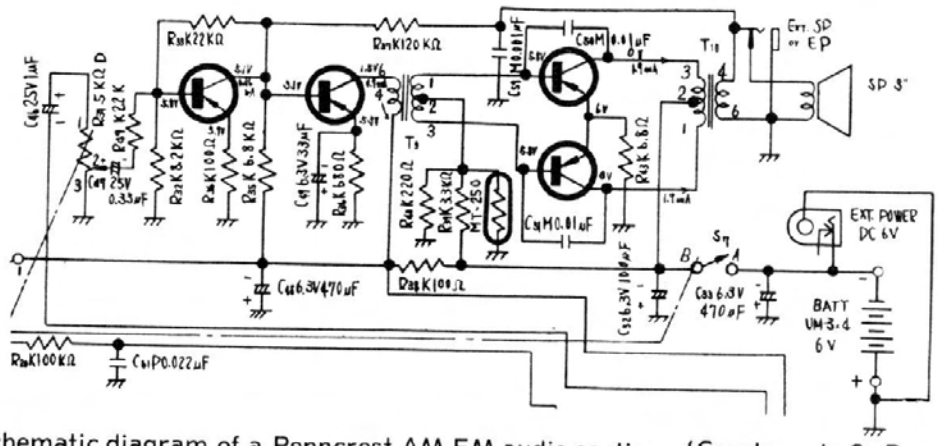

Fig. 3-2. Schematic diagram of a Penncrest AM-FM audio section. (Courtesy J. C. Penney Co.)

line and your equipment if at all possible. If your signal generator does not have a power transformer, an isolation transformer is necessary to prevent damage to the circuit. Other transformer-powered test instruments often have capacitors connected between the AC input and ground to act as line filters which may allow excessive AC line leakage.

Let's assume that you have taken all the necessary precautions concerning AC line leakage and now you are ready to troubleshoot. To check out the audio stages, connect your audio generator to the collector of the audio driver stage. You should hear a weak audio signal in the speaker, and as you move the generator from the collector to the base the signal should become louder, indicating gain. Since most audio stages in transistorized radios are operated Class B, this type of circuit troubleshooting is discussed here. A typical audio section is shown in Fig. 3-2. If there is an indication of gain when the generator input is moved from the collector of driver transistor TR7 to the base, move to the base of the audio preamp or first AF amp TR6. Again, there should be an increase in gain. If the coupling between TR6 and TR7 is not direct, move the generator probe first to the collector of TR6 and then to the base. The audio output from a receiver of this type is approximately 200 mw undistorted. This means possibly more audio than 200 mw, but chances are, it has some distortion. Suppose there is a distorted signal when the generator is put on the collector of TR7. This can mean a number of things–a defective transformer, in either the input or output, a bad speaker, a defective transistor, incorrect bias, or too much input signal from the generator.

An oscilloscope can be very handy, too, when looking for an audio distortion problem. Start by connecting the oscilloscope across the speaker terminals. Connect the audio generator to the base of the driver transistor. Adjust the scope and audio generator to get a sine wave on the scope. If the sine wave is normal, as shown in Fig. 3-3A, increase the output of the generator until clipping occurs. As shown, normal clipping occurs when both halves of the sine wave are clipped equally. Abnormal clipping, as shown in Fig. 3-3B, is caused by incorrect biasing, a defective output transistor (mismatched transistors), or a defective transformer (if used). The distortion shown in Fig. 3-3C is called crossover distortion and is caused also by a mismatch in the output transistors or incorrect biasing. If the distortion shows up with the generator connected to the base of the driver transistor but not on the collector, the problem is in the driver circuit. If the distortion shows up with the generator only on the driver, the problem is in the power amplifier stage. At this point, disconnect the test equipment and power so you can make a few resistance checks. Check the biasing resistors and also the transformers. A shorted power transistor can often be found by noting its overheated condition as compared with a normally operating one. The necessary resistance and voltage tests help to isolate the problem to the guilty part. Many practical service hints on transistor replacement and testing are provided later in this chapter.

LOCATING THE TROUBLE IN AM-FM

Transistorized AM-FM radios lend themselves to a slightly different set of troubleshooting circumstances than a strictly AM unit, simply because there is an extra receiver in the package. In fact, this can be used to help you isolate the trouble to one section or another. Let's take an example. Fig. 3-4 is a circuit diagram of a Penncrest AM-FM transistor radio which uses nine transistors and

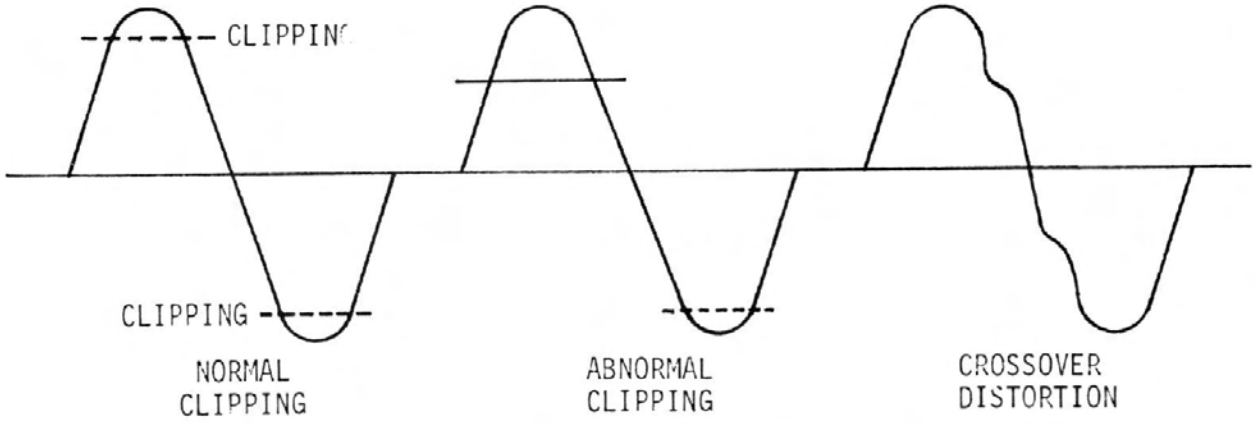

Fig. 3-3. Oscilloscope waveform diagrams showing an audio sine wave with normal clipping (A), abnormal clipping (B), and crossover distortion (C).

operates from 117 volts AC rather than from batteries. An AM-FM receiver has separate converter stages for each of the two bands. In other words, there is an FM converter and an AM converter. Either AM or FM will feed to the IF and audio stages, depending on which band of frequencies is being received, as selected by S1 through S4.

In this receiver, the switches are shown in the FM position. The FM signals picked up by the FM antenna are amplfiied in TR1, coupled to converter TR2 and then fed to the base of TR3 through S1. Switch S3 is positioned to allow the FM signal to pass through T2 to the base of TR4. T3 is the AM transformer which passes the AM IF signal during AM reception. The second AM third FM IF stage operates the same way, except that its output is now coupled either to an AM or an FM detector. Then the AM or FM audio output is connected through the volume control to first AF amplifier TR6, second AF amplifier TR7, and finally to the audio power output stage consisting of TR8 and TR9.

In a receiver of this type, a defective stage in the FM circuit does not always mean that the AM part of the radio is defective, too. A problem such as an open coupling capacitor, an open resistor or transistor, open tuning coil, or a lead in the FM section still allows operation on AM. The same conditions hold true for a problem in receiving AM, providing there is some sound or noise. Since both functions of the receiver use the same IF and audio stages, a problem here shows up on both bands, normally. Again, this helps you to analyze a symptom.

Many imported AM-FM units on the market today contain a built-in amplifier and a phonograph, or provisions for one. Troubleshooting a system like this simply involves troubleshooting the individual units of the system. Just as in the brief discussion of the AM-FM receiver, the total system concept just needs to be broken down into its basic parts. The first thing in locating the trouble is to check out the system one function at a time. Audio is the quickest and easiest to check because it is common to all of the functions of a combination home entertainment system. Start by giving an operation test on AM. If you receive noise but no signals, try the system on FM. If it works there, check it for phonograph operation too. Somewhere along the way, you will be able to zero in on the problem and isolate it to one area. Then you can go to signal tracing and circuit measurement to find the actual culprit.

LOCATING OSCILLATOR TROUBLES

One of the troubles in a transistorized receiver circuit that is tough to nail down to a particular component is a problem in an oscillator stage. In a tube-type circuit, you can check at the grid of a tube and find out if the circuit is working. If it is, you can read the bias voltage and control the amplitude of the oscillator signal by changing the value of the bias resistor. A transistorized receiver, however, is not quite so simple. But one quick way to check for proper oscillator operation in a transistorized receiver is to bring it close to another operating receiver. Set the operating receiver tuning to the high end of the band. Then tune the suspected receiver slowly across the dial and listen for a whistle, indicating that the oscillator is working. If you don't hear the whistle, chances are pretty good that the oscillator is dead.

Another method of checking oscillator operation is to use a voltmeter. The schematic diagram of Fig. 3-5 shows the FM/RF portion of an RCA AM-FM tuner/amplifier. Here is a typical transistorized oscillator circuit in which the incoming signal from the antenna is coupled to an RF stage, amplified, and then coupled to an FM mixer

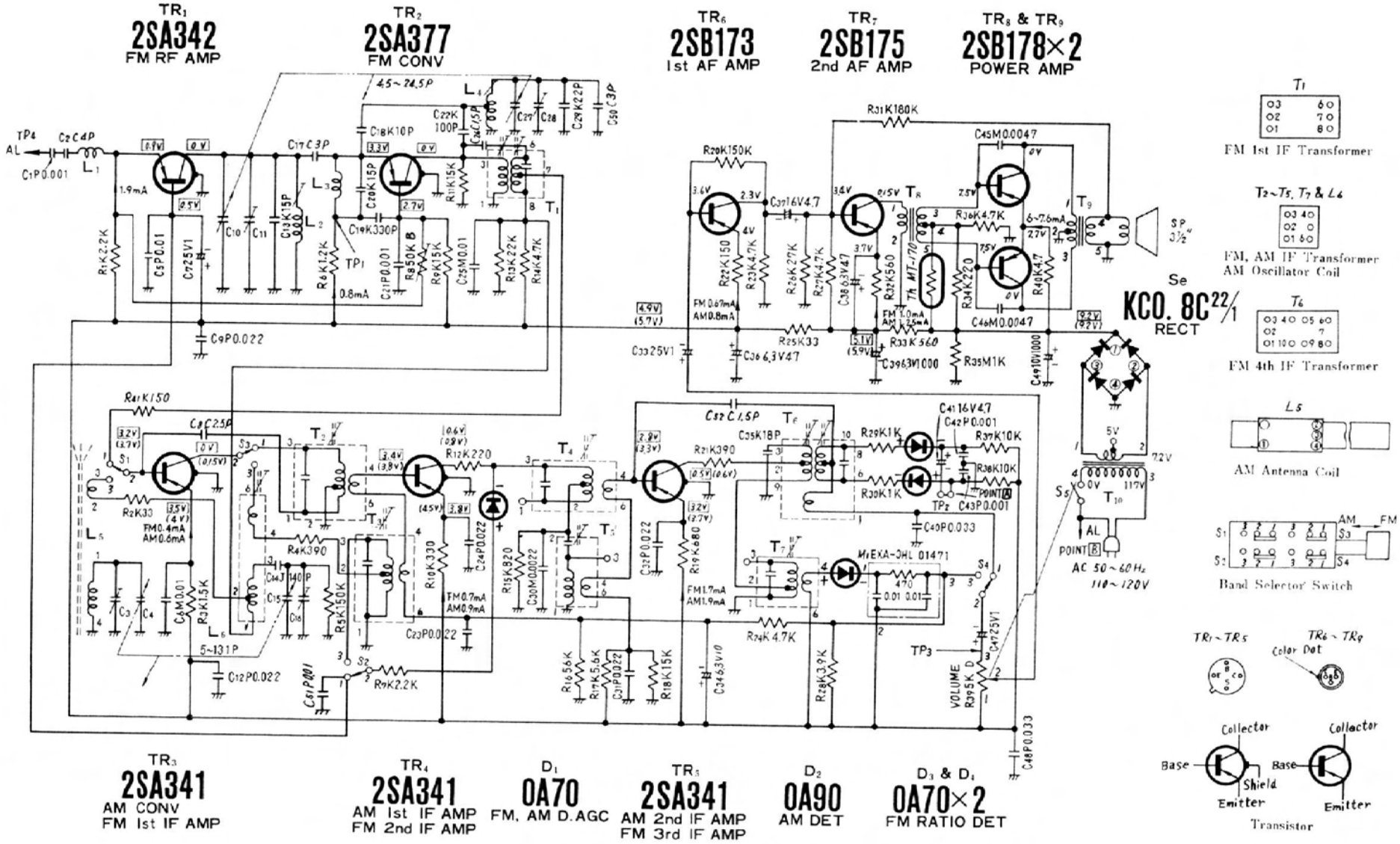

Notes :

1. S1~S4 : Band selector switch in "FM" position.
2. S5 : Power source switch in "OFF" position.
3. DC voltage measurements are taken with circuit tester (10KΩ/V) from chassis.
   □.....FM Position ( ).....AM Position
4. Capital letters (M, K, J, P, C) in the circuit diagram show allowable tolerance of resistors and capacitors as follows.
   M=±20% K=±10% J=±5% P=+100% − 0%
   C=±0.25PF
5. PF=pico farad=mmf
   μF=micro farad=mfd
6. All resistor values in ohms (K=1000Ω).
7. All capacitor values in micro farads (P=mmf).

Fig. 3-4. Complete schematic diagram of a Penncrest Model 5391A AM-FM receiver. (Courtesy J. C. Penney Co.)

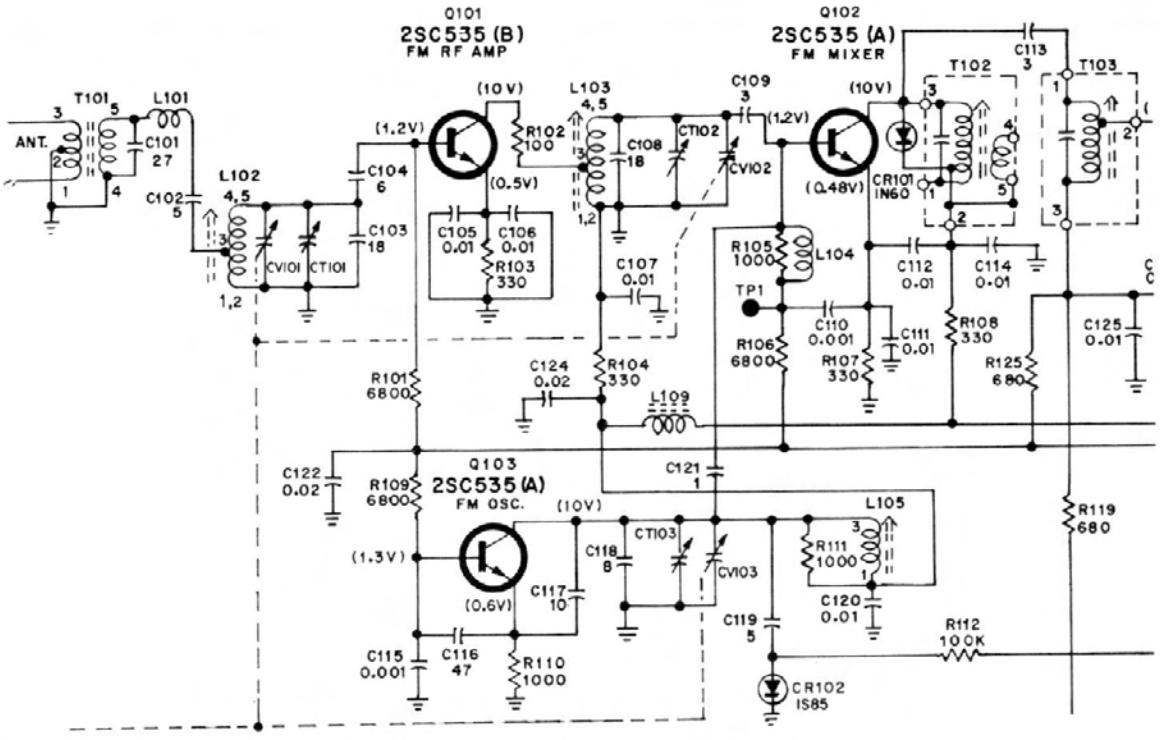

Fig. 3-5. Schematic diagram showing the FM/RF section of an RCA AM-FM tuner amplifier. (Courtesy RCA)

stage where it is mixed with the signal from the FM oscillator. Since this is an AM-FM/tuner-amplifier system, a problem of no FM reception has pretty well been isolated to this stage. So let's check it out. A quick test with another receiver shows the oscillator is dead, or at least there is no whistle. For an additional check, connect a VTVM or other high-impedance voltmeter across oscillator emitter resistor R110. Be sure to use a high-impedance instrument, especially in an oscillator circuit where values are more critical. While monitoring this voltage, short out oscillator coil L105. This causes the emitter voltage to increase. If it doesn't, you probably have a defective transistor. One helpful note here–RF, IF, and converter transistors normally read above 5000 ohms in the low direction on an ohmmeter.

Some transistorized receivers use a converter rather than an RF stage and an oscillator. In receivers of this type, the best way to check the oscillator is to simply measure the voltage from the emitter to ground. If this voltage is larger than the voltage specified by the schematic, the oscillator is not working and it means a check of everything from the antenna to the first IF stage.

There is also another way you can check the receiver's oscillator in case you don't happen to have a spare receiver around to use as a detector. This method requires a signal generator. Naturally, the generator has to cover the frequency of the receiver, and needs sufficient output to be picked up by the reciever. This method is simply to wind a few turns of hookup type wire around the receiver antenna coil. Connect the hot output of the signal generator to one end of this wire and the other signal generator lead to ground. Use caution when working with AC line-operated equipment, as mentioned earlier. Ground the signal generator to the IF can shields if you are not sure of the common tie point. Tune the signal generator to 455 kHz and you should be able to tune in the broadcast signals. What you are doing is actually substituting the signal generator for the receiver's own oscillator. If the receiver now works, you know the problem is an inoperative oscillator and you can start resistance and voltage checks.

Defective IF stages can also be located by using the signal injection method. In this procedure, you go through each stage as you do in an audio section. Start by setting the signal generator for a modulated IF output. The IF used most in imported equipment is 455 kHz. Set the generator for a 455 kHz RF signal approximately 30 percent modulated at 1000 or 400 Hz. Connect the signal generator to the base of the IF stages one at a time, working toward the front end of the receiver just as you would for an audio check.

HOW TO LOCATE A DEFECTIVE TRANSISTOR

There are various methods that may be used in locating a defective transistor, such as using a noise signal generator, which can quickly isolate a defective stage in audio and RF circuits of the import unit. Simply touch the noise probe to the base and the collector terminals of each stage, in turn. When the signal disappears, the defective stage is located.

Then the transistor itself can be tested in the circuit with a beta transistor (Fig. 3-6) by con-

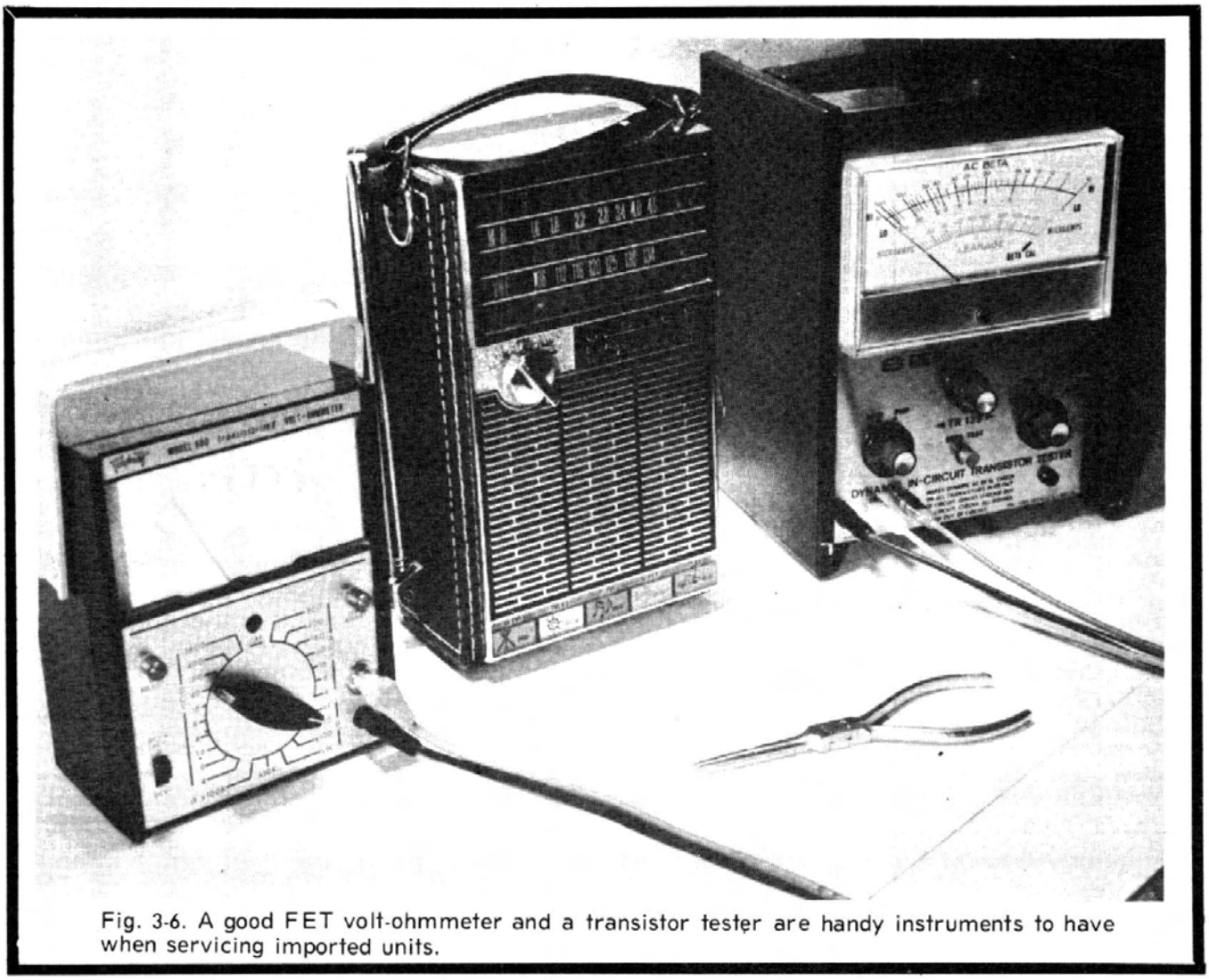

Fig. 3-6. A good FET volt-ohmmeter and a transistor tester are handy instruments to have when servicing imported units.

necting the in-circuit tester to each transistor terminal and checking for an open condition. Generally, a normal beta reading indicates a good transistor. Transistor leakage tests however, should not be made in the circuit. Always unsolder the collector terminal from the PC board because other components in the circuit prevent accurate leakage readings. Naturally, you can remove the transistor from the circuit board and test it out of the circuit.

Making in-circuit transistor tests can sometimes be very difficult. Many import transistors are not marked for identity or proper terminal connections. Neither are some of the American models. If all transistors had a part number, most of them could be replaced with a universal type. They could be cross-checked in a transistor replacement manual, and if proper terminal connections were marked on the PC board it would make solid-state import repair a lot easier. Since many are not properly marked, the technician must compare, record, and seek the correct replacement.

Another method often used to locate a defective transistor is to make low voltage measurements with either a VTVM or a FET VOM (Fig. 3-7). An open transistor has a high collector voltage, equal to the supply voltage. Also, you can short the base to the emitter terminal and see if the voltage increases. If not, the transistor is open. **Do not** short from the base to the collector terminal or the transistor can be ruined.

A leaky transistor has lower and somewhat closer voltage measurements on each terminal, while a directly shorted transistor has equal voltages on the shorted elements. Always remember, the collector terminal of a PNP transistor has the highest negative voltage followed by a lower (more positive) base voltage and even lower emitter voltage. For instance, in an import auto radio, the collector terminal of an IF stage may connect to ground through the primary winding of the IF transformer, as shown in Fig. 3-8. In this case, the collector voltage is at zero potential and the emitter terminal has the highest positive voltage. If it were an NPN transistor, the collector terminal would have the highest positive voltage in respect to the emitter terminal. Resistance measurements at the transistor terminals do not effectively locate a defective transistor.

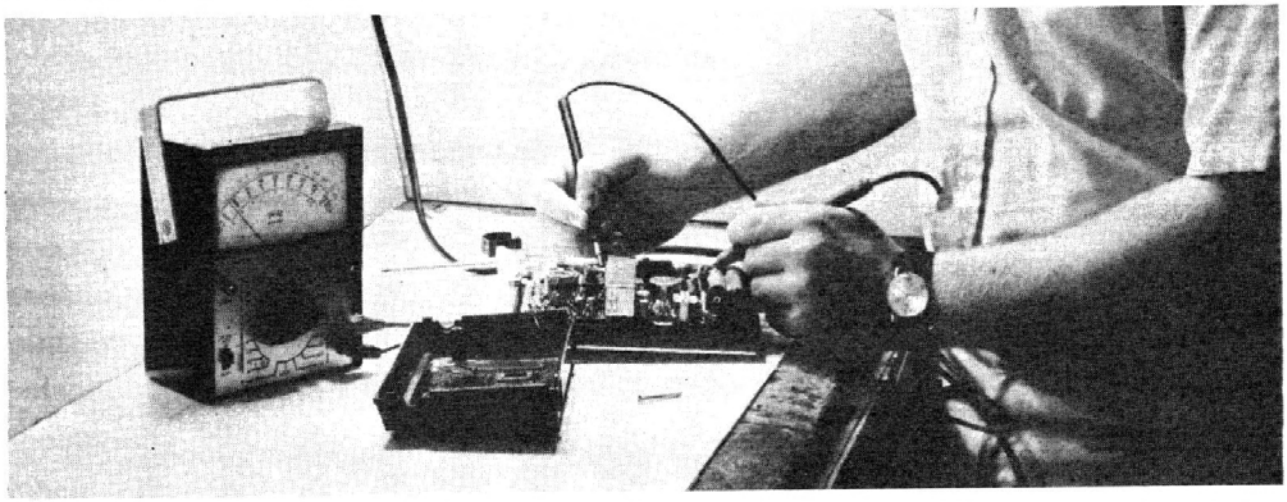

Fig. 3-7. One way to check a suspected transistor in-circuit is to take voltage measurements.

A leaky or shorted transistor can sometimes be located by holding the transistor between your fingers. If the transistor feels warm, you can suspect that it is shorted or leaky. Power transistors in the output and sweep circuits of solid-state TVs, however, normally are quite warm to touch after a period of operation. Also, check the base and emitter bias resistors for possible overheated burned marks when a shorted or leaky transistor has been found. Make a resistance check of these bias resistors with the defective transistor out of the circuit.

IN-CIRCUIT TESTS

Before tests can be made, a schematic diagram should be obtained. In case an exact circuit diagram is not available, select a comparable schematic as a guide, then use it to locate and compare with other import units. Many of the import units are quite comparable in circuitry, but a good schematic diagram is a must item in servicing solid-state equipment.

The next step is to connect the in-circuit beta tester to the transistor. But which lead is correct? Some popular transistor basing connections are shown in Fig. 3-9 and apply to both American and import transistors. Select the basing connections that are nearest to the suspected transistor. Just to be sure, double check to see how the transistor is connected into the circuit. For instance, in the IF circuit of an import portable radio, both the collector and base terminals may go to a different IF transformer winding (Fig. 3-10). In this case, the

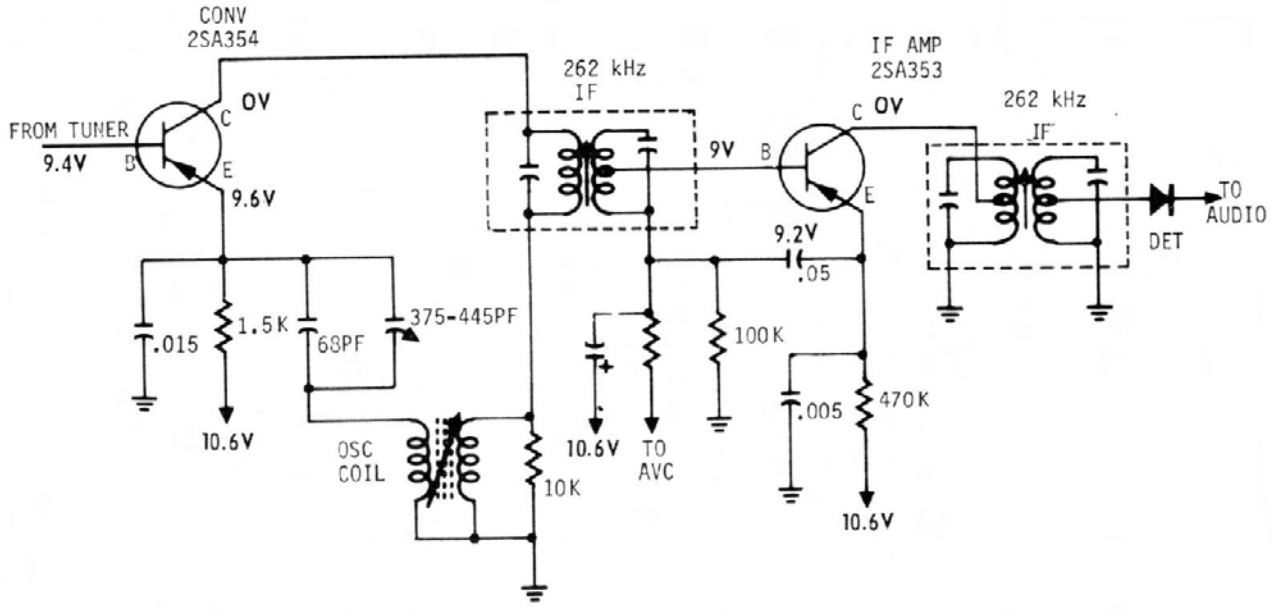

Fig. 3-8. A partial schematic diagram showing the IF section of an imported auto radio.

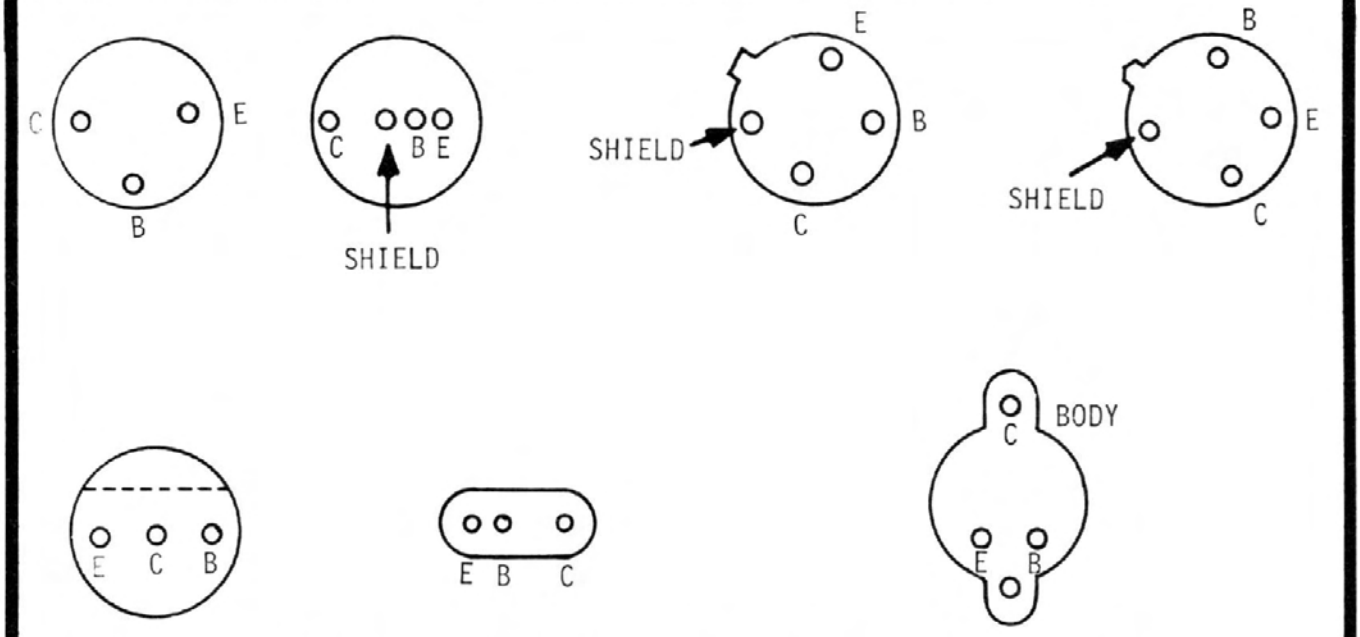

Fig. 3-9. Diagrams illustrating the bottom view of many typical imported transistor terminal locations.

emitter terminal must be at ground potential. See if the emitter bias resistor goes to ground. It is possible that the emitter resistor ties to the B-plus source, but the emitter terminal is easy to locate. Now connect the in-circuit transistor tester to the emitter. Go one step farther and measure the voltage on the collector terminal. Remember, the collector terminal in a PNP transistor has a higher negative voltage than the base terminal. Likewise, the collector terminal of an NPN transistor has a higher positive voltage than the base terminal.

Now, connect the collector and base terminals to the in-circuit transistor tester. Set the transistor selector to the PNP position and make a quality test. If the transistor provides some sort of a reading, it is not open. In case no reading is ob-

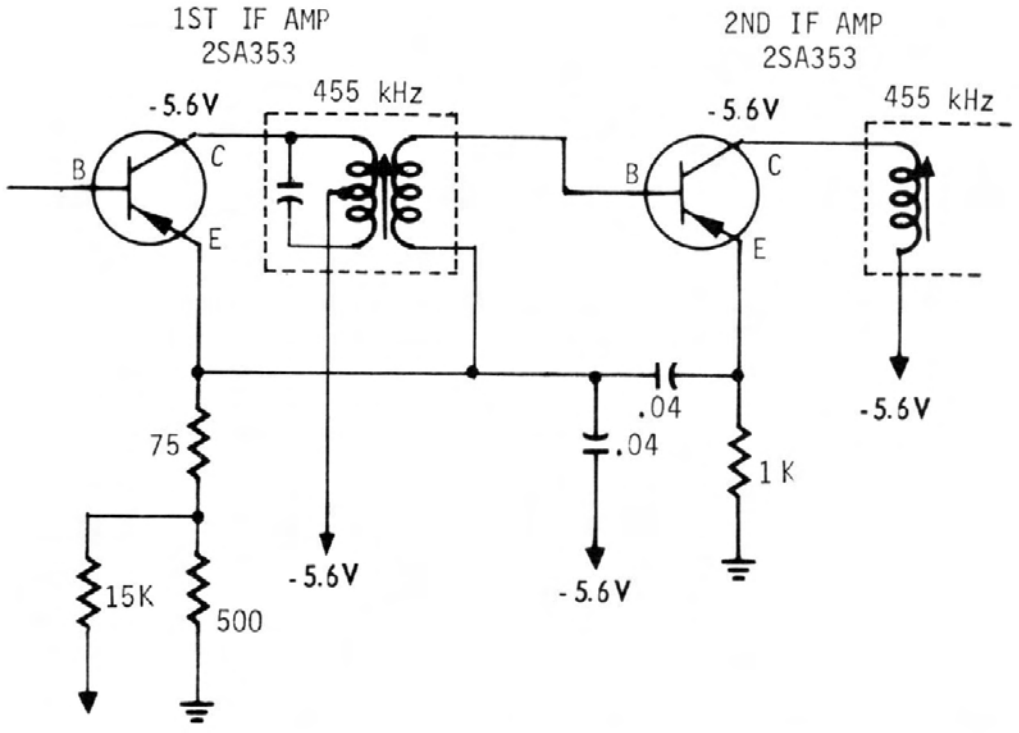

Fig. 3-10. Schematic diagram of the IF section in an imported portable radio.

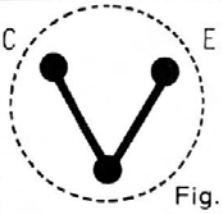

Fig. 3-11. Make a "V" with a felt marking pen on the bottom side of the circuit board to mark the transistor terminals for reconnection later.

tained, switch to the NPN position and make a retest. An open transistor will not give an indication in any position. To make sure you have the correct transistor terminals, reverse the collector and base terminals and make another test. Disregard the leakage test at this time. If the transistor will not test in any position or is suspected to have leakage, remove it from the PC board and test it out of the circuit.

OUT-OF-CIRCUIT TESTS

Before removing the suspected transistor from the etched board, mark each transistor wire terminal. In some instances these terminals may be marked or printed on the PC board. You can mark them C, B, and E, but an even safer method is to mark a large V on the etched wiring side as shown in Fig. 3-11. Use a black felt pen and place the base terminal at the bottom of the V. The collector terminal is to the left and the emitter to the right. If the V is placed on top of the etched board, remember to reverse the C and E terminals. With this method, most transistors can be properly marked before being removed from the board. When removing and replacing transistors in the FM or higher-frequency circuits, do not use the felt pen directly on the copper foil, since it is possible to change static circuit values and add additional trouble to these critical circuits. Maybe some service technicians do not have to mark the transistor leads and can remember the position of all terminals. Today, with the rush and demand of over-burdened service, we can be easily interrupted at the service bench and possibly slip up. A simple V mark may be the difference between profit and loss.

There are also many good out-of-circuit transistor testers on the market. In fact, the same transistor testers used in-circuit will do a beautiful job in testing the transistor out of the circuit. Here again, make certain the tester is connected to the correct transistor terminals. Accurate leakage tests should be made on the transistor when it is out of the circuit. A shorted transistor will bang the meter needle against the peg, while a leaky transistor will have a high leakage reading. When making an open test, you can quickly spot a leaky transistor. Although the meter may have a high reading, the meter pointer will vibrate, indicating a leaky transistor.

When in doubt about the correct connections and readings of a suspected transistor, remove it from the circuit board. If the transistor has no identification marks, compare the bottom terminals with known transistors and connect it to the transistor tester. It may be necessary to interchange a couple of terminals to get a quality reading. This is very simple and easy to do with the transistor out of the circuit. If in doubt, replace it.

REPLACING OR SUBSTITUTING TRANSISTORS

Probably one of the biggest headaches of searching for replacement parts is to locate the right transistor to use in some circuit of an import radio when no information is available. Sometimes it may even be a problem telling whether the transistor is an NPN or a PNP. So how do we go about replacing a transistor in this kind of situation. First of all, look for the obvious–a diagram pasted in a cover, a part number or type printed on the transistor or circuit board. You might also check with the customer to see if he has some circuit information at home in a drawer. Maybe a quick call to another service technician can save you a lot of time. But if none of these possibilities work out, all is not lost. There is another way. At the present time it is a system used mainly by engineering labs, but with the popularity of transistors in today's equipment, the technique is being simplified and brought to light to aid the technician. This system or technique involves making a graph of a transistor's operating characteristics and presenting it on an oscilloscope. The way this is done becomes quite involved to explain, but easier to do with an instrument called a "curve tracer." This unit plots the dynamic characteristics of the transistor onto an associated oscilloscope screen. In some instances, the scope and tracer are integrated into one unit. In others, a black-box arrangement is available for use with any good DC scope. The block diagram in Fig. 3-12 shows a curve tracer-scope system.

Since this technique actually plots the operation of the transistor, it can be used quickly and accurately to compare one transistor against another. How does this help us service an import set? A curve tracer is designed to operate either NPN or PNP types. Simply plugging a transistor into the unit tells you whether it is an NPN or PNP by selecting the switch position that allows the transistor to operate and display a pattern on the scope. So now we know whether or not we have a PNP or NPN transistor, but we still have a defective transistor and no apparent way to substitute for it. All is not lost. We said that a curve tracer technique can be used to compare one transistor against another because the transistors are fed with high voltages and currents to provide a plot on the scope. If this is true, then all we need is one good transistor like the defective one to use as a reference. Most transistorized import units have duplicate transistors. Locate one that appears to be the same and carefully remove it from the circuit. Use it as your reference. Plug it into the curve tracer and adjust it for a reference display on the scope. Then simply start plugging in transistors from your stock or junk supply until you find one that looks like your

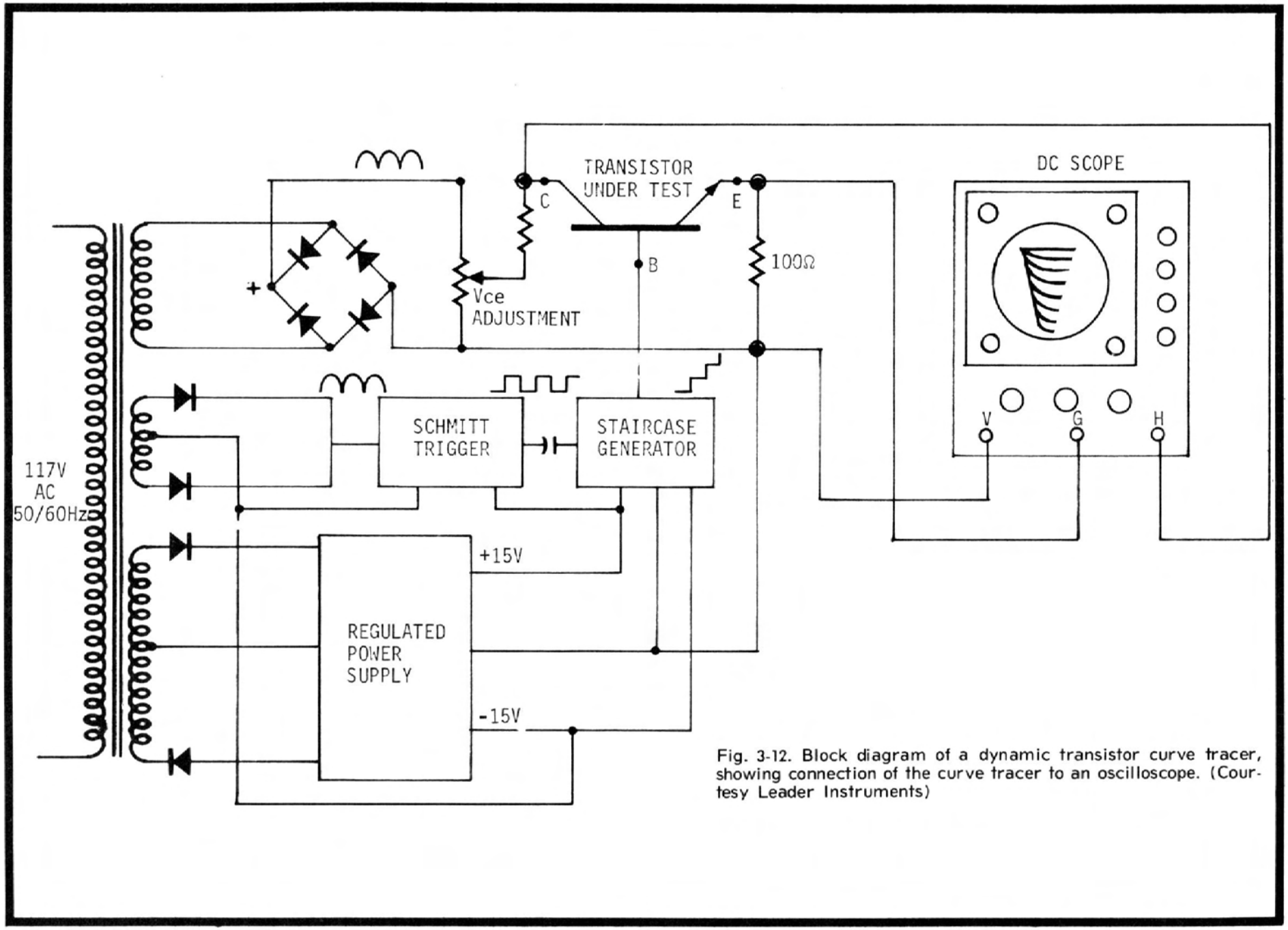

Fig. 3-12. Block diagram of a dynamic transistor curve tracer, showing connection of the curve tracer to an oscilloscope. (Courtesy Leader Instruments)

reference as you compare them. When you find one that is close, you can be relatively sure it will work.

It always pays to test a new transistor before replacing it in a circuit. At least this way you can be sure that something else is wrong besides the unit you just replaced. It is also possible to ruin a transistor or diode with too much heat. Use a heat sink when soldering. An alligator clip of the miniature type works well if you happen to be one of those humans with only two hands. Needlenose pliers are fine too, if you can handle the pliers, solder, and iron all at one time.

Double-check the mounting position of the new transistor. Be sure each lead is going to the correct terminal. On many etched circuit boards there may be four mounting holes for the transistor. Many times you have to bend leads because the holes do not line up. If you marked the transistor terminals when you removed it, you should have no difficulty in replacement.

With power transistors, make sure whether the transistor is insulated or mounts directly on the metal heat sink. If insulated, apply silicone grease to the transistor and heat sink. When mounting to the heat sink make sure the power transistor is in line and is firmly seated. Before connecting the emitter and base terminal wires, check with an ohmmeter to see that there is no short between the heat sink and the transistor if the transistor is supposed to be insulated from heat sink. When a transistor is mounted directly to heat sink, then check to see that the heat sink is not shorted to the chassis. Often the chassis itself may be the heat sink and here, in most every case, there will need to be some sort of electrical (but not thermal) insulation between the chassis and the transistor.

Never replace or remove a transistor with the power on. Also, make sure the power is off when making in-circuit transistor tests. In critical FM circuits, the replacement transistor should have the same lead length and be installed in the very same mounting position. This also applies to VHF and UHF tuners.

OTHER TESTS

When an identification number is listed on the defective transistor, look in a transistor cross-reference manual for a universal replacement. It may be necessary to check several transistor manuals to locate the import transistor. If the transistor is not listed, compare the stage and functions with an American schematic. Both transistors must be either PNP or NPN types. Select a universal replacement for that stage and make sure the operating voltages are correct. Do not select a transistor rated at lower operating voltage than the supply voltage.

Another method is to compare the transistor beta reading with another type transistor. For instance, transistors in a push-pull audio circuit should be matched. Take several transistors and test them on a curve tracer or a beta tester. Then choose the two most closely matched transistors.

Many times an RF transistor performs nicely in an audio circuit, but the audio transistor probably does not function in an RF circuit. RF, oscillator, and VHF transistors are often critical. They should be replaced with correct types. A UHF tuner transistor usually replaces a VHF tuner transistor. Substitution of transistors takes time and can be frustrating, but you may have no other choice. You can console yourself that you are learning what will and what won't work.

SPECIAL TECHNIQUES AND HINTS

When checking a transistorized unit, it is a good idea to use a filtered power supply designed for transistor work and one that has a good usable current meter. Set the power supply to the correct voltage required by the transistor radio as determined by the indicated battery supply normally used in the unit. Then turn the supply and radio on. A good rule of thumb to check the current drain on transistor radios is this: If the radio has six transistors and operates from a 9-volt battery, it normally draws from 6 to 9 ma of current. If the radio operates from a 3-volt battery, it should draw about 12 to 15 ma. As a rule, each working transistor draws approximately 1 ma--that is, for a good radio. Many sets run about 1.5 ma per transistor, but when the current drain goes over that, check for trouble.

A quick way to check a transistor's current drain is to short the emitter to the base while watching the power supply meter. Shorting the emitter to the base turns the transistor off and the battery eliminator power supply current drops accordingly. If a particular transistor stage does not provide this condition, with the emitter-to-base short, then it should be tested. Also check the voltage divider biasing resistors.

OTHER HINTS

When working with an oscillator stage, you may come up with problems of intermittent operation. Here are a couple of things to watch for. If the radio seems to operate normally on the lower end of the band and quits at the high end of the dial, change the transistor. If the replacement transistor operates only on lower frequencies (sometimes this happens in an oscillator circuit), find one that oscillates at both ends of the dial without quiting.

A little hint when replacing transistors in the audio section might save you some problems in imported units. Do not be too critical in your selection of replacement transistors for the audio stage. The biggest thing to worry about is the current drain. When replacing transistors in the RF or IF sections, this is another situation. When replacing a foreign-made transistor, the best thing is to replace it with another that is labeled "Replacement for Foreign Transistors." If it is replaced with an American-made transistor, it is more likely to cause the stage to oscillate.

Another word on replacing audio transistors, especially in the output stage. If only one of the transistors is defective, replace both of them. You can buy them in pairs and in most cases they come that way (two in a package). If you don't purchase

them that way, you will be defeating the purpose of replacing them both, which is to prevent distortion.

When you do replace these transistors, check the current drain of the radio or audio circuit with the transistors removed and the volume control all the way down (minimum audio). Then install one transistor, check the current drain again and record it. Install the second transistor and repeat the procedure. The amount of current drain recorded by the first transistor should be the same as the second transistor. If it is not, check the bias transistors in the forward-bias voltage divider stage.

If one of the audio output transistors is defective and you don't want to replace both of them or cannot obtain a matched pair, here's a way you can find one to match. Remove the defective transistor and check the current drain of the radio. Then short the emitter to the base of the audio output transistor left in the circuit and record the reading. The difference between these two readings is the amount of current the good transistor is drawing and you can use this value in selecting the other audio transistor you need for the stage.

IF HINTS

As mentioned earlier, a quick way to check the IF section is to inject a signal. Most AM IF stages are 455 kHz. If you have a problem of weak reception or weak signal output, it is a good idea to check the alignment of the IF. It's a good idea even if you don't have this type of problem because it seems when people open these radios to insert a new battery, they just can't resist turning the screws and coil slugs. Then, too, maybe they feel that by turning everything in the radio, it will start to work again once it has failed. Whatever the reason, IF alignment takes very little time if you follow a few quick steps.

First be sure that the tuning capacitor is fully meshed. Couple a modulated 455-kHz signal generator with the ferrite antenna coils using a couple of turns or loops of wire. Then adjust the IF transformers for maximum audio. If you want to be even more scientific, you can use the current meter on your battery eliminator power supply and tune for maximum current. Assuming that the radio has a Class B output stage (most imports have, but not all), a low-range AC voltmeter across the speaker will act as an output meter. Some technicians have an output meter with leads terminated in an earphone plug. Simply plug the meter into the earphone jack to align a set. Of course, if you have an AC-VTVM you can connect that across the speaker, too. But the current meter in your power supply works just as well. Most imported transistor radios have Class B push-pull audio output stages so the current meter will give a good indication.

Now with the tuner set to fully open, set the signal generator for 1650 kHz (high end of the dial) and adjust the oscillator trimmer for maximum output. Re-tune the signal generator and radio to about 550 kHz and tune the oscillator coil for maximum output. Repeat this procedure a couple of times to get maximum output.

CHAPTER 4

Troubleshooting Without a Schematic

Sometimes it may seem impossible to service an import without a schematic diagram, and we would be the last to say it is always easy. But sometimes, for various reasons, such as to please a good customer, or just because of the challenge, you will want to tackle the job anyway. We would also point out here that tracing through circuits without benefit of a schematic can give you valuable experience for future jobs of the same nature and may even be a prelude to increased profit. As in any field, you must be prepared to lose money while increasing your skill on early jobs to be ready to profit on later ones.

When you first open a strange piece of imported equipment (Fig. 4-1), your first impulse often is to box it up again quickly and forget the whole thing. That fear of the unknown won't go away unless you face up to the situation and start looking for familiar landmarks. Imports, no matter from where, use essentially the same circuits as domestic versions. The things that often throw us for a loss are the differences in mechanical layout and design that can make you think at first they don't even use capacitors, resistors, transformers, etc. Of course, they do use them, and once you start tracing through the circuits you will find some interesting innovations, but not really so much difference after all.

FINDING A COMPARABLE CIRCUIT DIAGRAM

Included in this book are a number of hard-to-come-by as well as "standard" foreign schematics. The schematics were selected to cover a wide range of circuit variations. For example, you will find just about any kind of audio stage in use, whether it be Class A, Class B, transformer type, or transformerless. If then, you have audio troubles, you should find a circuit diagram that will help you in troubleshooting if the original is not available.

Although you can't turn it into immediate dollars, you can look forward to success in the service field by becoming thoroughly familiar with each kind of circuit. You can do this best by taking pencil and paper and sketching out that unfamiliar circuit. Once you know what the circuit is supposed to do and where the parts are, you will have practically eliminated the problem of troubleshooting that circuit, or another similar to it. For instance, does the circuit use germanium or silicon transistors? You can expect most newer equipment to use the silicon type, but there are some germaniums still in use. Silicon transistors usually have a bias (base-to-emitter voltage) of 0.4 volt or more, while germaniums will have no more than 0.2 volt. Another question is whether the circuit is direct coupled, capacity-coupled, or transformer-coupled. The tendency today, with lower priced transistors, is to use direct coupling at the expense of more transistors when necessary. This approach is much more practical with silicon transistors, since they are not greatly affected by changes in surrounding temperature.

Here are a few of the more common circuits found in imported equipment, and some of their peculiarities. Fig. 4-2 shows a rather conventional Class B audio output stage using both driver and output transformers. It also has an additional capacity-coupled amplifier stage to provide the gain necessary to make up for losses in the degenerative tone control circuit when turned to "bass."

Shown in Fig. 4-3 is the popular transformerless (OTL) output circuit. Circuits similar to this are found in numerous imported radios, tape recorders, tuner-amplifiers, and the like. Notice the driver transformer has a split secondary instead of a single center tap.

A 7-transistor audio output circuit used in an AM-FM radio is shown in Fig. 4-4 (actually there is an 8th transistor used as an emitter-follower prior to the volume control). No transformers are used in this circuit. The first two stages are capacity-coupled, while the last five transistors are direct-coupled. Although the designer of this circuit might be accused of "over-designing" just to add transistors to the circuit, it does represent what you can expect from imports with many transistors.

AM-FM radios always have separate tuner circuits for each band. The IF circuit may also use separate amplifiers for 455 kHz and 10.7 MHz but the

more inexpensive radios use the same stages as both 455-kHz and 10.7-MHz amplifiers, especially in later designs. This has come about because high-frequency transistors (which, of course, work well at low frequencies) are much less espensive than they formerly were. Silicon transistors also require less "selection" to fit a particular circuit application. It normally isn't hard to identify which kind of circuit you are dealing with, if by nothing more than the number of transistors used, and especially by their placement in relation to the IF transformers.

So far as troubleshooting is concerned, the completely separate IF system makes it fairly simple to decide whether the trouble is in the FM or AM section or in the audio stages. The combination IF has the advantage that you can check the transistors using a low-frequency signal (455 kHz) which is easier to work with, but don't overlook the fact that for AM it may work OK and not for FM. This can happen in a combo system if the tuning has been changed, an IF transformer goes bad, etc.

Fig. 4-5 shows how combination IF circuits are generally connected. There are some variations, but not so many as to make them unrecognizable. Notice that the FM IF transformer is always connected directly to the transistor. The AM IF feeds its signal through the windings of the FM IF transformer whose low inductance looks like a straight wire as far as the 455 kHz signals are concerned, so there is little if any loss experienced in this series connection, and the need for switching is eliminated. Some radios, though, switch one or more transformers (usually by shorting out the AM transformer) when the range switch is moved to FM.

SIGNAL TRACING

Tracing a signal through a circuit is one of the better ways of finding troubles. Usually, signal tracing involves injecting a signal at some point in the circuit, and then using either the speaker or an oscilloscope to monitor the change in signal output.

For audio tracing, a signal is fed into the audio circuit at a point near the output, say at the collector of the audio driver transistor (Point 1 in Figs. 2-2, 2-3 and 2-4). As a preliminary test in audio signal tracing, technicians often inject a signal at the center tap of the volume control, especially if they are not sure the trouble is actually in the audio. If sound is heard from the speaker, the injected signal is moved back to the base (Point 2 in Fig. 2-2) to see if there is gain (more output at the speaker) through the driver transistor. This process is continued back through the circuit toward the volume control until the signal disappears, or there is a great reduction in output level.

If there is no output from Point 1, there is no use in moving back to Point 2; the problem is obviously in the output stage. Perhaps the speaker is bad or the coupling capacitor to it (when used) is open, or no DC supply voltage. Try plugging an earphone into the earphone jack and see if you can hear the signal. If you do hear it the speaker may be defective or the jack switch is not connecting the speaker to the circuit.

When signal tracing with an oscilloscope, inject the signal at the center tap of the volume control (control should be at midrange). First touch the center tap of the control with the probe to make sure a signal is actually being injected, and to get the oscilloscope controls set for the proper size trace (a

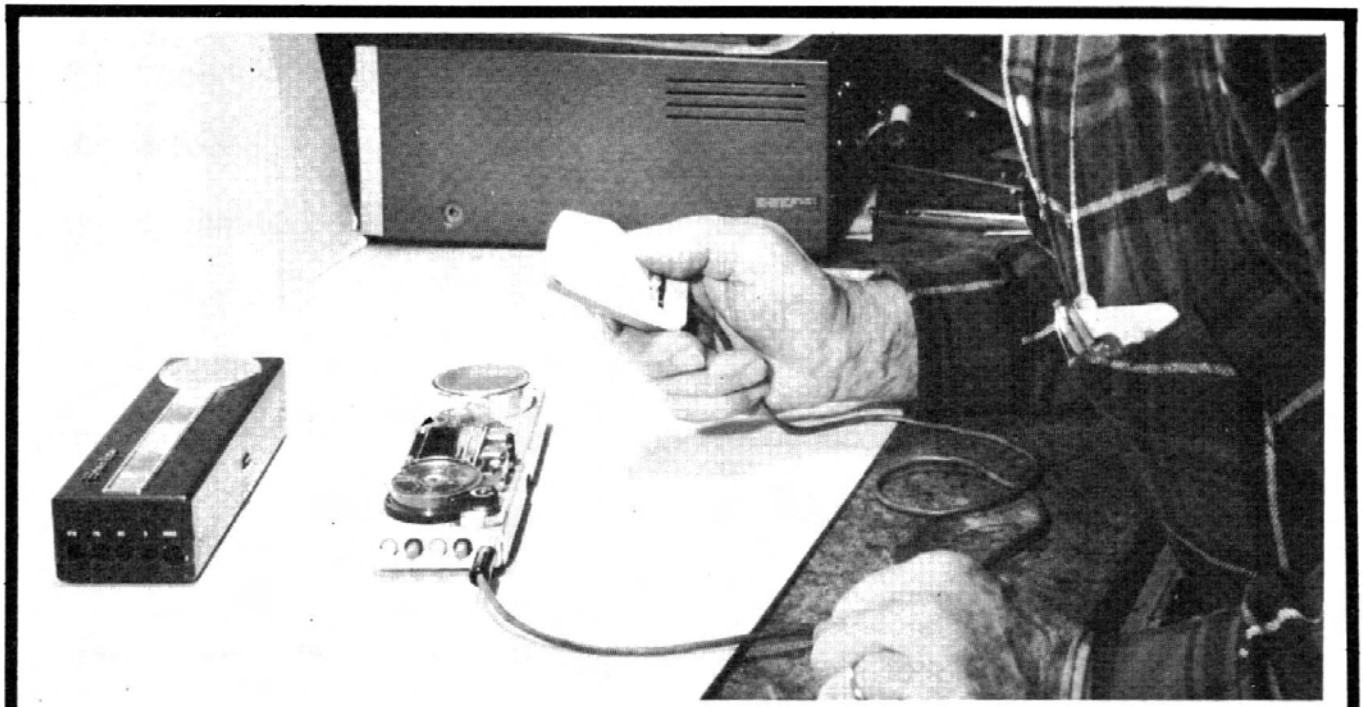

Fig. 4-1. You have to stifle the impulse to box up an unfamiliar import and send it back to the customer, if you expect to become expert in servicing the equipment. Here, a technician looks over a small imported portable tape recorder.

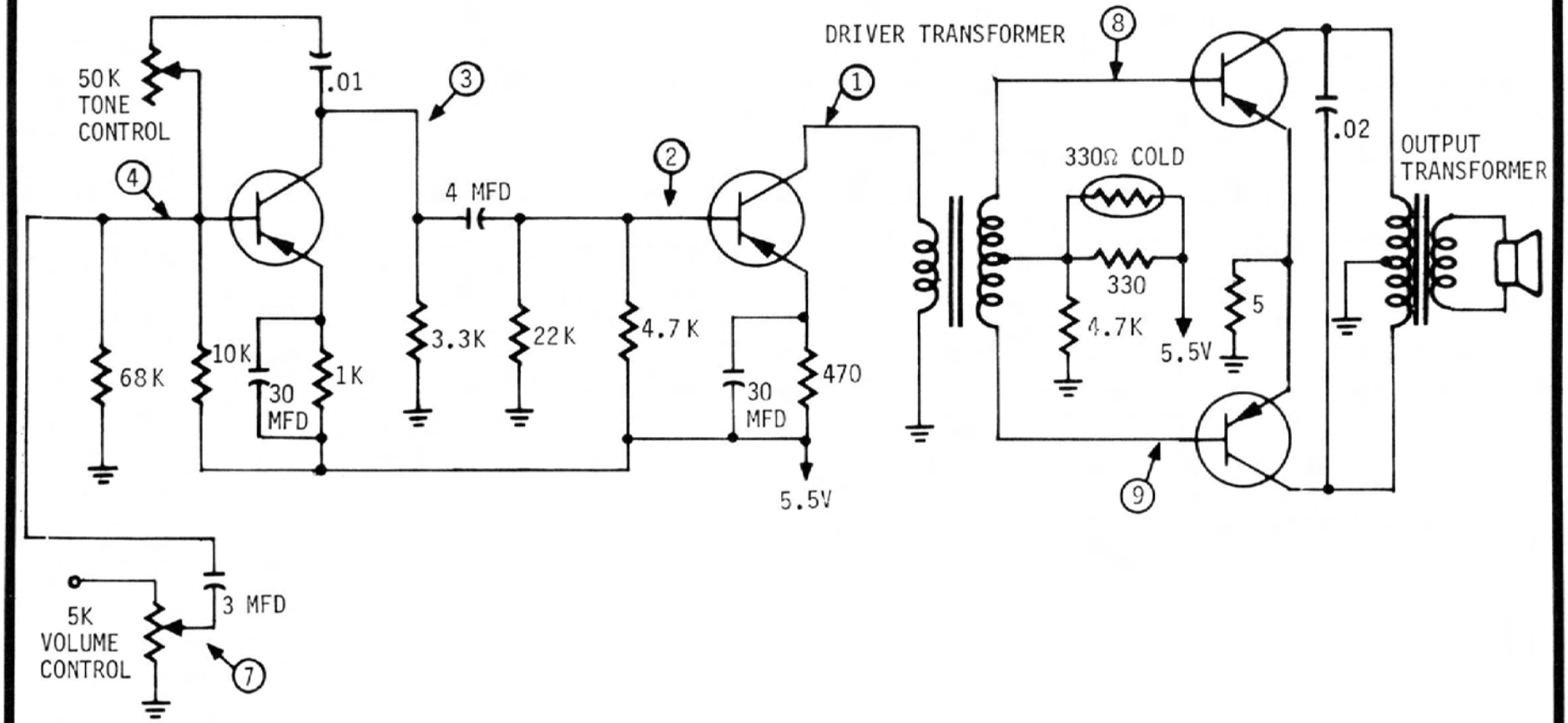

Fig. 4-2. A typical transformer-coupled audio amplifier with capacity-coupled pre-driver stage.

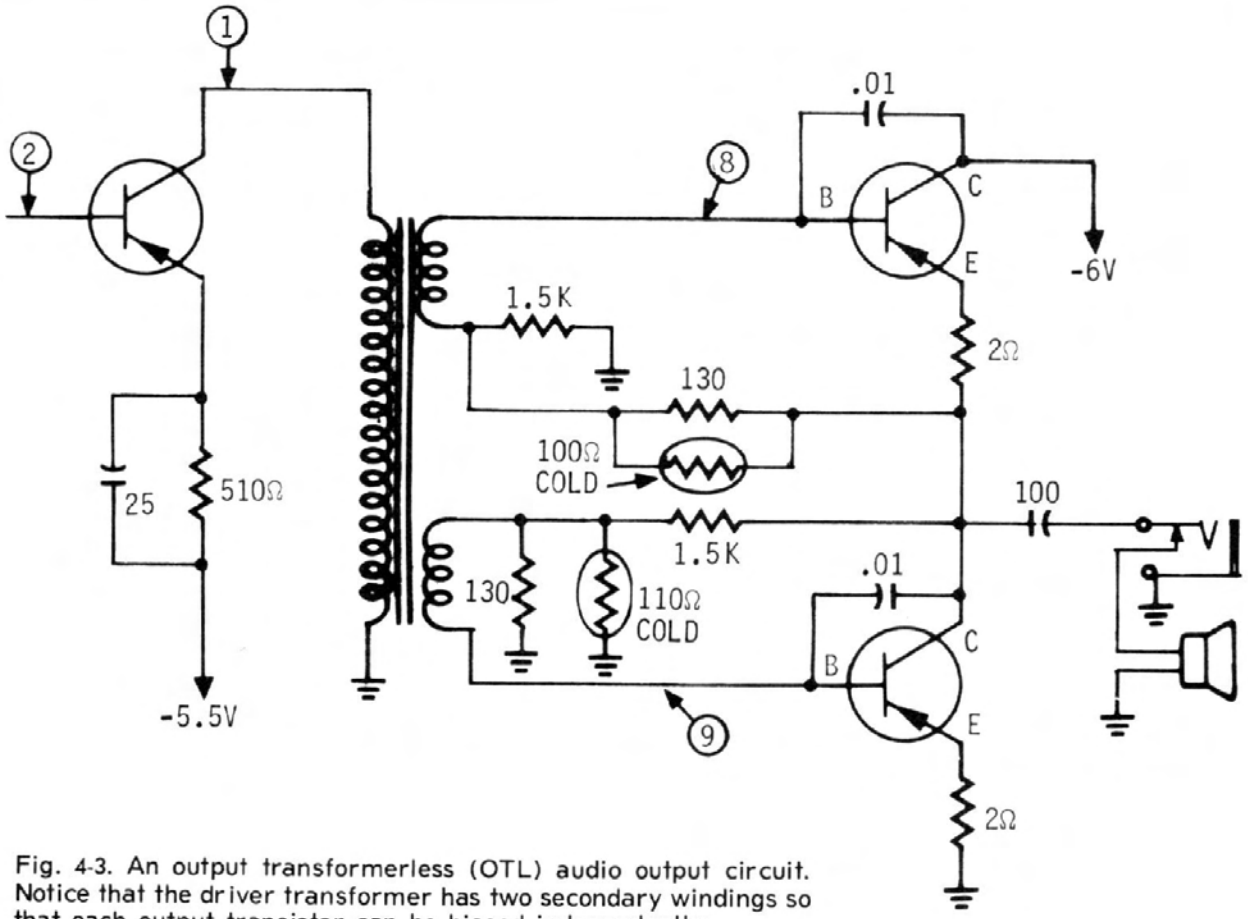

Fig. 4-3. An output transformerless (OTL) audio output circuit. Notice that the driver transformer has two secondary windings so that each output transistor can be biased independently.

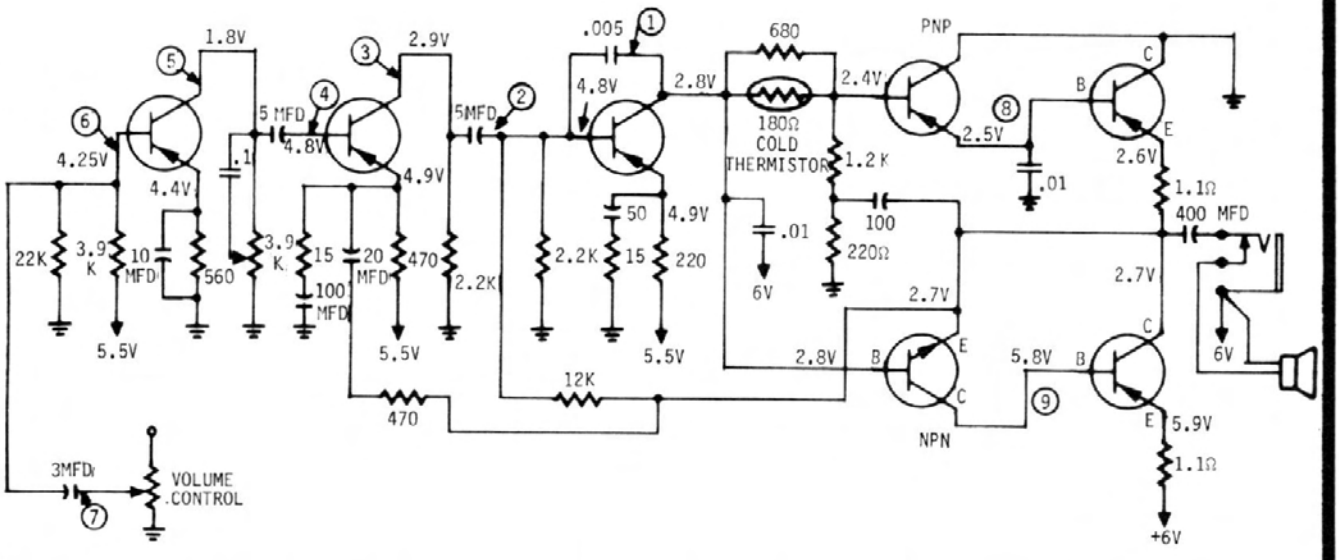

Fig. 4-4. An elaborate transformerless audio amplifier using seven germanium-type transistors.

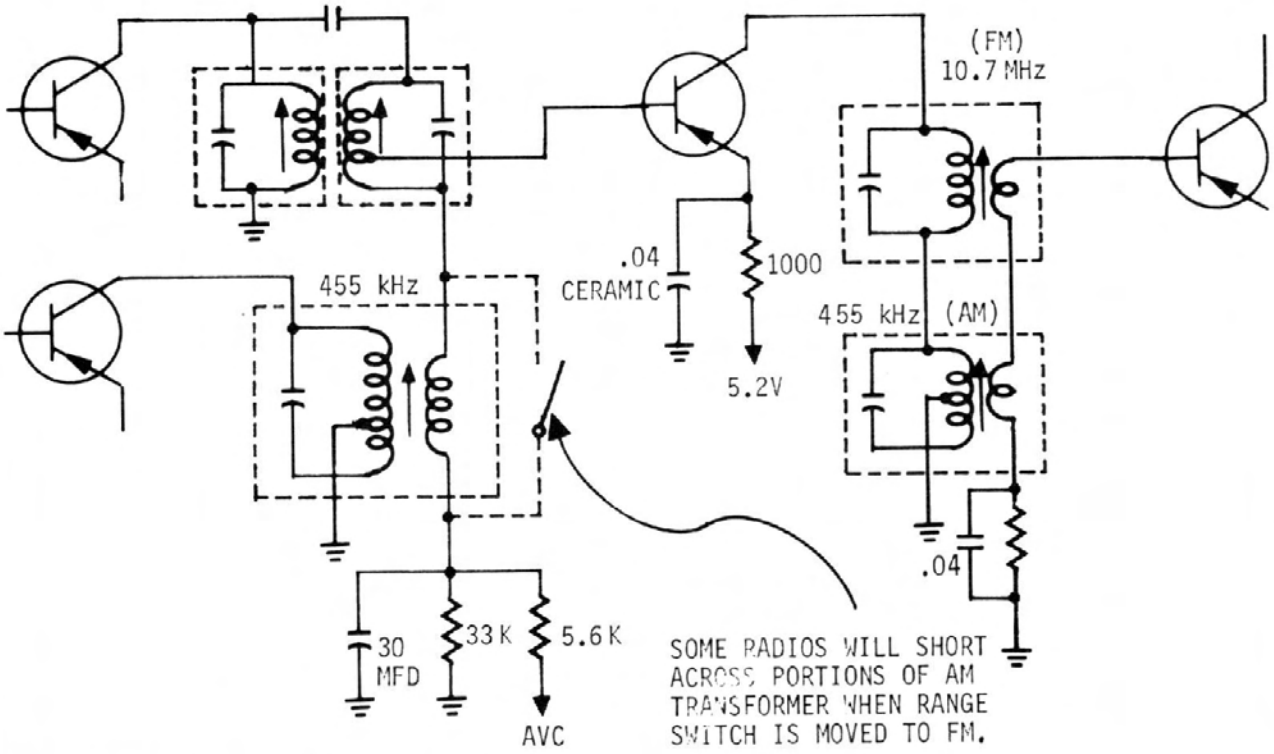

Fig. 4-5. Combination AM-FM IF Circuit. Notice that leads from the high-frequency (10.7 MHz) transformers always connect directly to the transistor terminals. The AM signal (455 kHz) is coupled to the next stage through the windings of the FM transformer. Because the FM transformer windings have few turns, it causes no more losses in the circuit than a short piece of wire, as far as the AM signal is concerned.

trace no higher than a quarter inch is ample, since you expect to get considerable gain out of the circuit as you go through it toward the trouble). To make sure you are not injecting too much signal, turn the vertical gain on the oscilloscope up to nearly full gain (attenuator should be set for least attenuation. Reduce the output of the signal generator to bring the trace down to the desired size, then use the scope attenuator to control it as you go through the circuit.

Once the scope has been properly set, move the probe from the arm of the control to the base of the first audio transistor; there should be no loss. Next, move to the collector of the first audio. Here, you should have gain. The amount of gain depends upon the kind of circuit and for what purpose it is used. (It may be for isolation, a convenient spot to insert a tone control, or it may be for matching the audio output from the detector to a specific sort of audio amplifier). It is also possible that the designer just wanted to use another transistor to increase the transistor count. You can expect gains of two or three times, up to as much as 15 or so in a capacity-coupled circuit (stage gains will be considerably lower than the possible gain of the transistor because of the loading effect of the following stage). In a transformer-coupled stage, you may find that the gain will approach the measured gain of the transistor, though for a transformer driver stage, voltage gain is not of prime importance. More important here is power gain, and measuring with the oscilloscope (which is measuring voltage) may show rather low stage gains, because the stages are designed for power rather than high voltage.

By the process of actually doing signal tracing, you will soon develop a sense-of-the-probable by which you can quickly decide whether a possible trouble exists.

An audio stage with an unbypassed emitter resistor will have low gain, especially if the resistor is above 100 ohms or so. This means that, if an emitter bypass is used, the gain of the audio stage will be low if the bypass capacitor is open. You can check a bypass with your oscilloscope while you are following the injected signal. Checking at the emitter terminal of the electrolytic capacitor (if you can't tell which is the emitter side, check both), you should find no audio signal; if you do, the capacitor is not doing its job and should be replaced. In very rare cases, such as at the emitter of the second transistor in Fig. 4-4 audio feedback is applied to the emitter; in such cases you will find a small amount of audio here. A good check is to compare the base input signal with that on the emitter; if they are virtually the same, the stage will have little gain. (Caution: Don't add a bypass capacitor if none was used originally. The designer may have deliberately omitted it to get better frequency response or to prevent oscillation.)

CHECKING A TV SET WITHOUT A SCHEMATIC

To say that it is easy to check a TV set without a schematic is to talk nonsense, but it can be done. It takes more time and you have to decide if either you or the customer can afford it. If you feel that you will be seeing more of the same kind of TV set, then you can quite reasonably spend some extra time to familiarize yourself with the set, even though that time won't be paid for. If you decide to work on the set, and you cannot find a schematic in this book, use a similar schematic to get you started.

Try to determine in which stage you should look for the trouble. The obvious troubles (no sound, no sync, no vertical deflection, no video, no raster, etc.) shouldn't give you too much difficulty in isolating the stage or stages, but the problem will be in identifying the stages on the printed boards. A good landmark to follow when looking for audio stages is to follow the lead from the center arm of the volume control, through the coupling capacitor (sometimes not used) to the base of a transistor. Of course, this will be the first audio transistor, and moving on from there should not be too difficult.

Finding the tuner is no problem, since it's connected to the channel selector on the front of the set. The video IF can be found by following the shielded output cable from the tuner; the cable will go to the first video IF stage, of course. The vertical stages usually have one or two transformers close by, and the vertical output will likely be a rather large power-type transistor. The horizontal circuit will also have a power transistor in the output which will connect to the flyback (high-voltage) transformer, either directly or through a capacitor.

Don't overlook the fact that a parts layout may be glued inside the cabinet somewhere (on a rare occasion you may even find a schematic). Such a diagram is a great aid in determining just where you can physically put your finger on a particular section of the TV receiver.

SKETCH OUT THE CIRCUIT

If you really want to become expert in servicing imports, or even domestic units that you can't get schematics for, take pencil and paper and sketch the schematic as you trace it on the printed board. Fig. 4-6 shows a video circuit that was sketched by

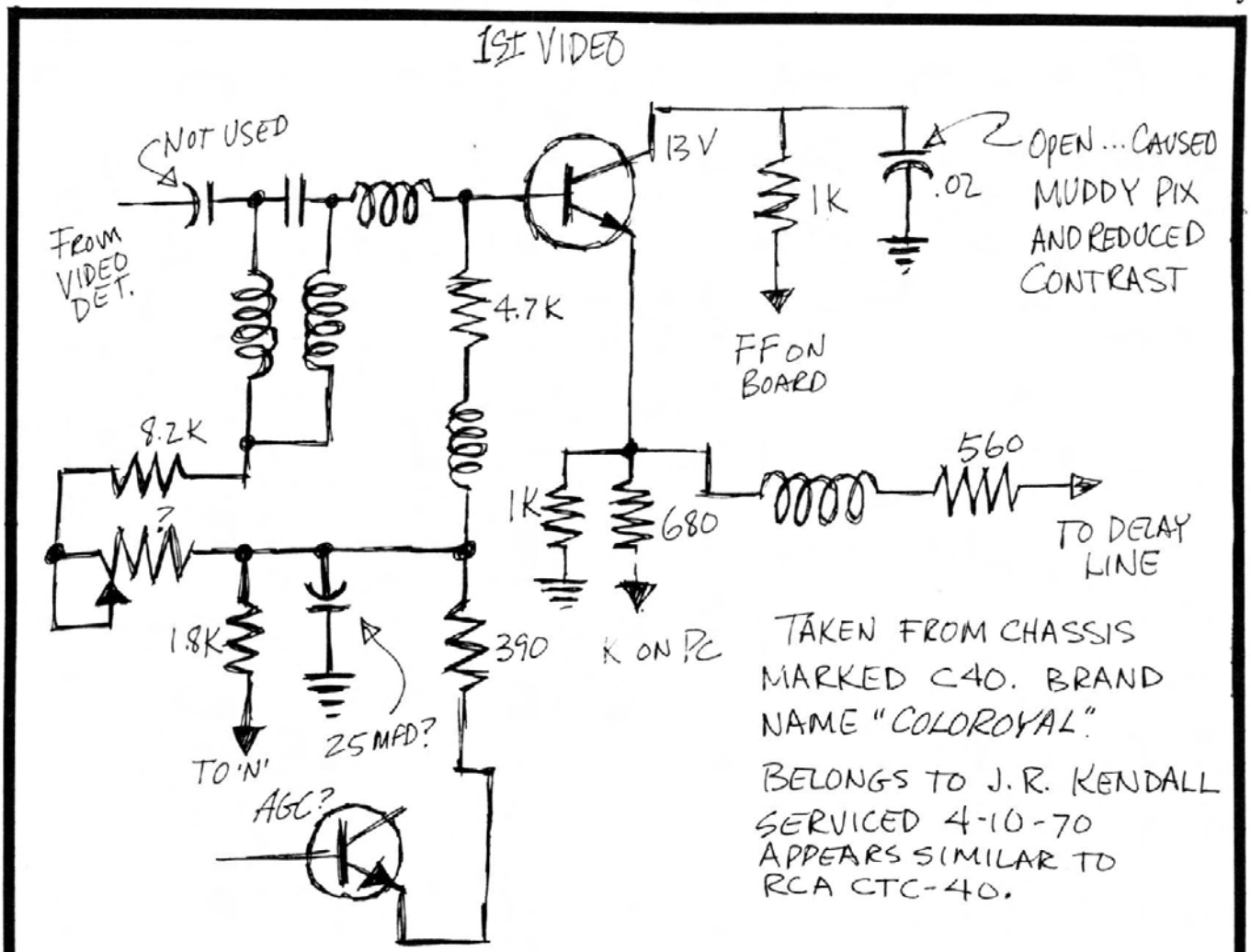

Fig. 4-6. Making a sketch of an unknown circuit helps to give you a clearer picture of the overall circuit. Notice that the sketch includes any numbers found on the chassis, brand name, etc., as well as the defective part and what the sympton was. Sketches should be retained for future reference.

following the printed circuits. The sketch indicates the brand name of the set and a number stamped on the chassis. It also tells who owned the set, when it was serviced, and other information that might be helpful in future servicing, such as the note that it appeared to be similar to an RCA model (perhaps a close copy) and also what the trouble was just in case it might be a weakness of this model. Notice that question marks are used where the technician was not absolutely sure of values, or didn't feel that taking the added time to find them was profitable. Notes such as this can be helpful to anyone having the same trouble again.

Sketches of this sort should be filed away. Usually there won't be so many as to require a sophisticated alphabetical or numerical cross-reference, since it is a fairly simple matter to quickly check the "sketch" file whenever a schematic is not available. Usually, just a single folder, placed under "S" (for sketch), is adequate. You may be surprised at how often this file will make you money.

MAKING RESISTANCE MEASUREMENTS

Once you have pinpointed the defective circuit and its location in the equipment, don't overlook the possibility that resistance measurements may show up a faulty part. In sets using germanium transistors it is not easy to make meaningful resistance measurements because of the rather high leakage in some of the transistors. With silicon transistors, though, where leakage is normally very low, it is quite practical to make accurate resistance measurements.

For meaningful resistance measurements in any solid-state circuit, you must make two readings. Note the first reading, then make a second reading with the ohmmeter leads reversed. The higher reading is the one most likely to be correct. The false (low) reading is caused by one or more transistors conducting when forward biased by the ohmmeter voltage.

There are ohmmeters on the market today which have a low enough terminal voltage so that two readings are not necessary, especially in silicon transistor circuits. This tape meter offers considerable advantage when direct-coupled circuits are so connected that you encounter a forward biased transistor no matter which way you connect the test prods across certain components. Normal shop-type ohmmeters use at least a 1.5-volt battery in their ohmmeter circuits, so any transistor will be forward biased when the ohmmeter leads are connected with the right polarity.

CHECKING TRANSISTORS IN-CIRCUIT WITH AN OHMMETER

In Chapter 3, in- and out-of-circuit transistor testers are discussed, and a tester of this sort is well worth its price. However, for the technician who is "probing and hoping" as all of us do sometimes, an ohmmeter check of each transistor takes very little time and often as not it will spot a probable trouble—one at least that will merit further checking.

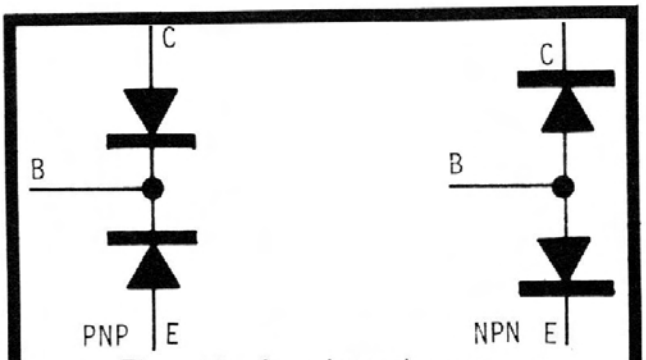

Fig. 4-7. An ohmmeter sees a transistor as two diodes, one between collector and base and another between emitter and base. The resistance between the collector and emitter should be high, with the reading determined by the leakage (reverse current) of one of the diodes. Readings between collector and emitter will vary slightly when you reverse the ohmmeter leads because one of the diodes is almost certain to have greater leakage than the other.

So far as an ohmmeter knows, a transistor is nothing but two diodes connected back to back as in Fig. 4-7. In germanium transistors the "diodes" appear to have resistance in both directions because of leakage (reverse current). There is also some leakage in silicons, but it is generally so high that it can be ignored (and most ohmmeters will ignore it). Even on the RX1000 scale, the meter may not even move off infinity.

With the transistor out of the circuit, if you measure between the collector and base for example, the ohmmeter will read a low resistance (forward current) in one direction and a high resistance (leakage current) when the leads are reversed. The same is true of the base and emitter. But between the collector and emitter (see Fig. 4-7), regardless of which way the ohmmeter leads are connected, one of the diodes will be forward biased and the other reversed, so the reading between the collector and emitter should be a high resistance in both directions. Actually, the two readings will differ because the two diodes are not identical and, therefore, will have different leakage resistances.

When a transistor is measured in-circuit, essentially what you look for is a difference between the forward and reverse readings between base to collector and base to emitter readings. Between collector and emitter, if the reading is high in both directions, you can be fairly certain the transistor is good. This is because transistors, especially silicon types, seldom develop any leakage between collector and emitter except for a low resistance short caused by the voltage rating being exceeded. If you measure between base and emitter and find that the reading is the same both ways, you are almost sure to have a bad transistor. The only exception would be when a circuit component that had less than 50 ohms or so resistance is connected between the transistor leads. This occurs in a few

circuits where only signal bias is used, such as the horizontal output stage of most TV receivers. Even in the horizontal output stage, because of the low forward resistance of the power transistor used, you can still normally see a small difference in the readings, even with a low-resistance transformer connected directly across the input.

WHAT ABOUT TRANSISTOR REPLACEMENTS?

You may not find markings on many foreign transistors, and even if you do, they may not be found in a cross-reference chart. Fortunately, many companies now make a line of replacement transistors for just about every spot in any common type of equipment–radio, tape recorder, TV, etc. When replacing an unknown type transistor, what you need to know first is whether it is an NPN or PNP, and is it silicon or germanium. In addition, you need to know what its operating voltage is, and in what kind of circuit it is used, as pointed out in Chapter 3.

As a rule of thumb, most germanium small-signal and power transistors are PNP types and most silicon small-signal and power transistors are NPN. Notice we say most, for there have been numerous NPN germaniums and PNP silicons, put in sets, but the rule of thumb may help you get started in the right direction so that as you add information you can more than likely be absolutely sure. It is also a rule of thumb that radios, tape recorders, and TVs generally use one type of transistor–that is, mostly germanium or mostly silicon.

Most units made since about 1967 lean heavily on the use of silicon units, with the exception of the power transistors which were usually germanium units. Silicon power transistors later started replacing the germanium units in new designs, almost universally, mainly because they are smaller, run cooler, and generally may be operated at higher voltages. With germanium transistors, frequency response is more critical. They must be selected more carefully for a particular application. However, it is always possible to use a transistor designed for higher frequencies on lower frequencies. With the change to silicon and the improved methods of manufacturing, resulting in lower quantity prices, manufacturers can now provide universal replacements that will take care of a large range of frequency requirements and operating condition.

The greater uniformity, and the lower leakage and capacity effects associated with silicon transistors, have made it almost universally used in new equipment designs, as we have already indicated. But how can you tell the type if you don't have any service information? One way is to check the bias of other similar stages around the suspected bad one. If the bias (base-to-emitter voltage) is more than 0.35 volt, you can be sure that the transistor is a silicon type. If it is less than 0.2 volt, then the transistor is a germanium. (This holds true only in Class A circuits. It is not true for oscillators, some sync circuits, vertical and horizontal output stages, etc.)

At one time, replacement transistors made in America would not always work in similar imported circuits. This was because of internal capacity effects and differences in gain, which worked together to cause oscillation. This is no longer true, for the most part, and especially with silicon transistors. If in doubt about a replacement, remove the old transistor and tack in the new one temporarily, perhaps even on the side of the board, to see whether the replacement will work satisfactorily before making a permanent replacement.

CAPACITOR REPLACEMENTS

Most small capacitors used in imported battery-operated equipment are rated at 50 volts or less. Electrolytics usually have the voltage and capacity ratings clearly marked. The small ceramic bypass capacitors are normally not overly critical as to capacity, with any size from about .001 to .047 mfd working equally well as a replacement. Notice that this is for bypass capacitors and not for timing, tuning, or coupling capacitors, such as those used in critical stages of a portable TV. Bypass capacitors in high-frequency circuits, such as FM or TV tuner circuits, may be more critical and are certainly more critical as to lead length and position.

In audio circuits, the emitter bypasses are normally electrolytics, as are any coupling capacitors. The exact size is not critical, but you should use one of a larger capacity rather than a smaller one. Decoupling or power supply line filters are not critical either, as long as you use one as large or larger in capacity than the original. Sometimes you can get by with a smaller one, but it isn't good practice to try.

TRANSFORMER REPLACEMENTS

Interstage audio transformers should be replaced with one of the same type. The impedance may not be too critical, but it should be not too far away from the original. The problem may be one of physical mounting more than an electrical one in some cases. Audio output transformers also may be replaced with any transformer that is relatively close in electrical characteristics. For example, a 500-ohm-to-8-ohm voice coil rating will replace a 600-ohm to 10-ohm voice coil, with no loss of audio quality. In fact, a 1000-ohm to 8-ohm voice coil will likely not be enough mismatch to cause any problem at all. Again, if in doubt, simply tack in the replacement and listen to a musical program. If you are like most technicians you will have a better developed ear for noting distortion than all but the most critical of set owners. Transformer replacements in TVs, such as vertical output, flybacks, and the like, nearly always require an exact replacement, and it is generally too much a problem and too time consuming to try to jury-rig a replacement.

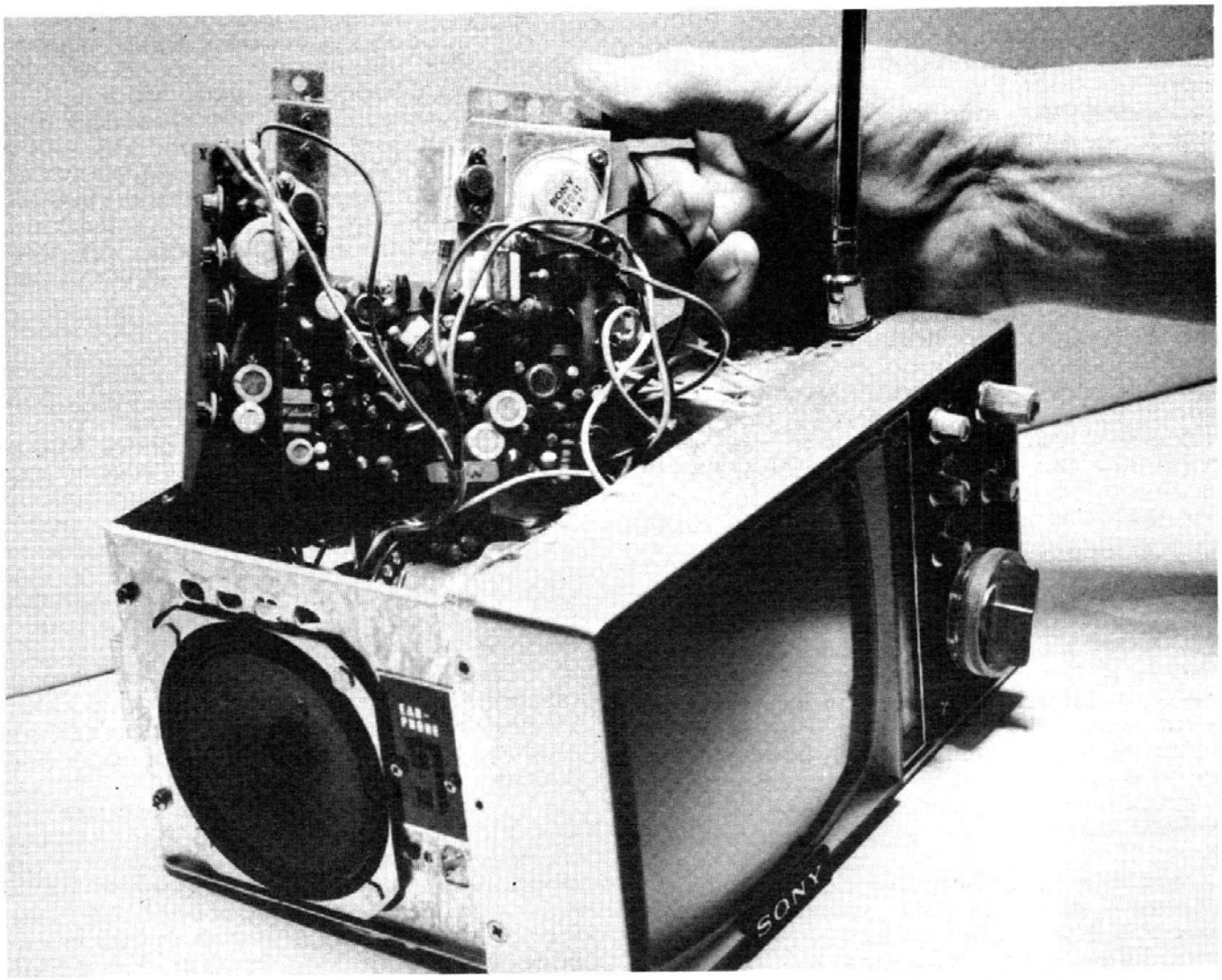

Fig. 4-8. Physical size enters into the replacement component picture. This Sony TV set indicates how crowded such chassis can be.

USE EXACT REPLACEMENTS WHEN POSSIBLE

No sentence in this book should be regarded as saying that a substitute replacement is as good or better than the original. The preceding suggestions are intended as a guide so you know about how far you can go in making a replacement. Obviously, there will be "exact" replacements that will fit more than one make of set, but you won't always know where to find them, and the part numbers will invariably be different. Two replacement parts that look exactly alike physically may have no resemblance at all electrically, so don't take anything for granted. Make as many checks as possible before committing yourself to a trial replacement.

As you know, soldering and unsoldering from a printed circuit, especially if you are removing a part, soon "gets to the board," and each successive replacement is more apt not to work the first time, even though it may be an exact replacement. Use a small iron and no more heat than absolutely necessary when you solder on a printed board. A "suction" soldering iron is ideal to draw off excess solder when replacing parts, and it will often eliminate the needless reheating of the board that causes the printed circuits to lift away or disintegrate.

Fig. 4-8 shows the inside of a small imported TV set, and in this case the part number on one power transistor is clearly visible. If an exact replacement is not available, a substitution will probably suggest a duplicate type. But, as you can see in Fig. 4-8, parts substitution is quite limited by the cramped quarters.

CHAPTER 5

Typical Circuit Diagrams

Included in this chapter is a variety of schematics representing typical AM radios, AM-FM radios and stereo tuners, auto radios, tape recorders, and TV. Additional TV schematics, both color and B&W, appear in the foldout section.

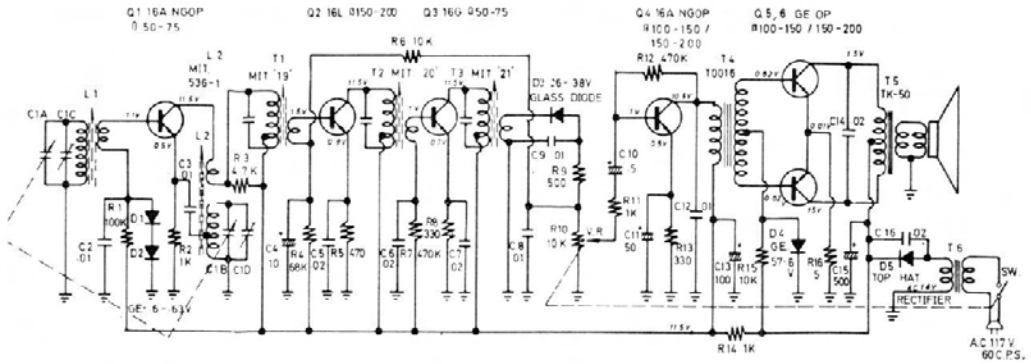

Fig. 5-1. Emerson Model 31T58 AM radio. (Courtesy Emerson TV & Radio)

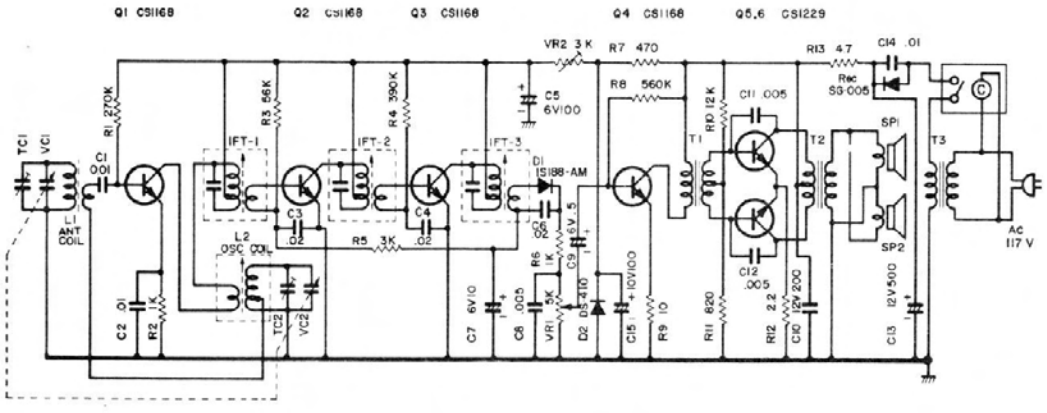

Fig. 5-2. Lloyd's Model 9J45-37A AM receiver. (Courtesy Lloyd's Electronics, Inc.)

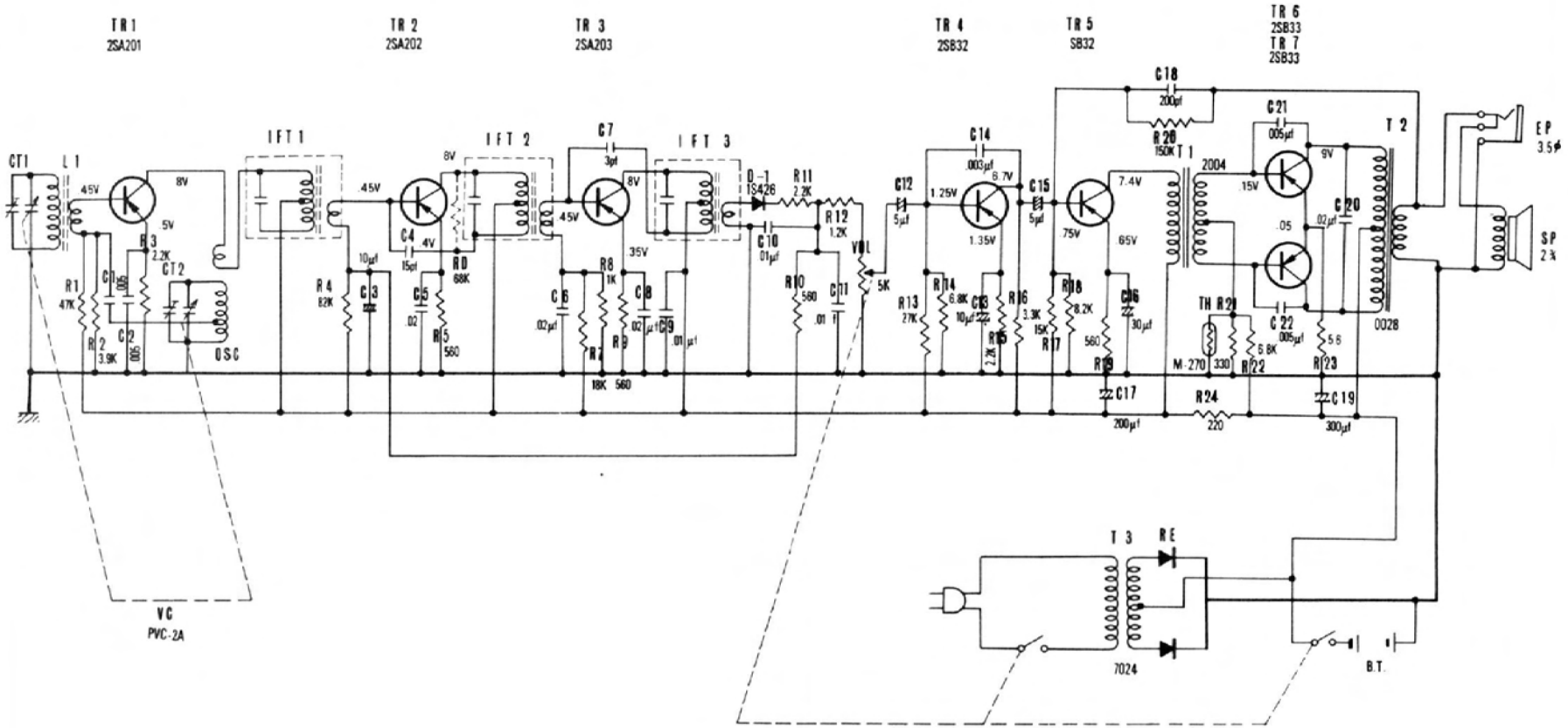

Fig. 5-3. Midland Model 10-319 AC-DC portable AM radio. (Courtesy Midland International Corp.)

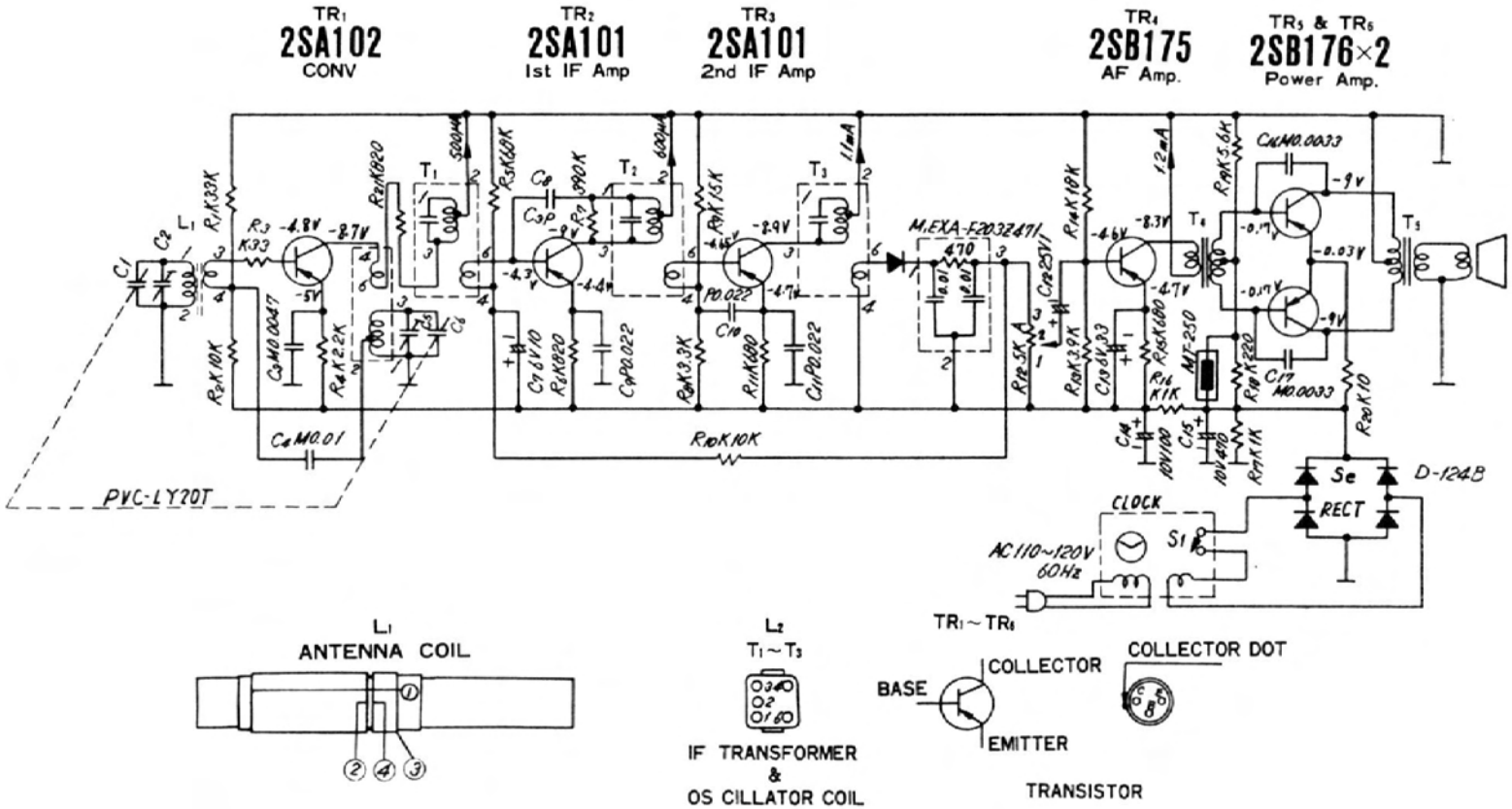

Notes:

1. Power source switch in "OFF" position.
2. Voltage measurements are under no signal conditions taken with a 10KΩ/volt voltmeter from transistor terminal to bias line (positive side).
3. Capital letters (M, K, J, P) in the circuit diagram show allowable tolerances of resistors and capacitors as follows:
   M=±20% K=±10% J=±5% P=+100% − 0%
4. PF=pico farad=mmf
   μF=micro farad=MF
5. All resistor values in ohms (K=1000Ω)
6. All capacitor values in micro farads (P=mmF)

Fig. 5-4. Panasonic Model RC-1089 AM radio. (Courtesy Matsushita Electric Corp. of America)

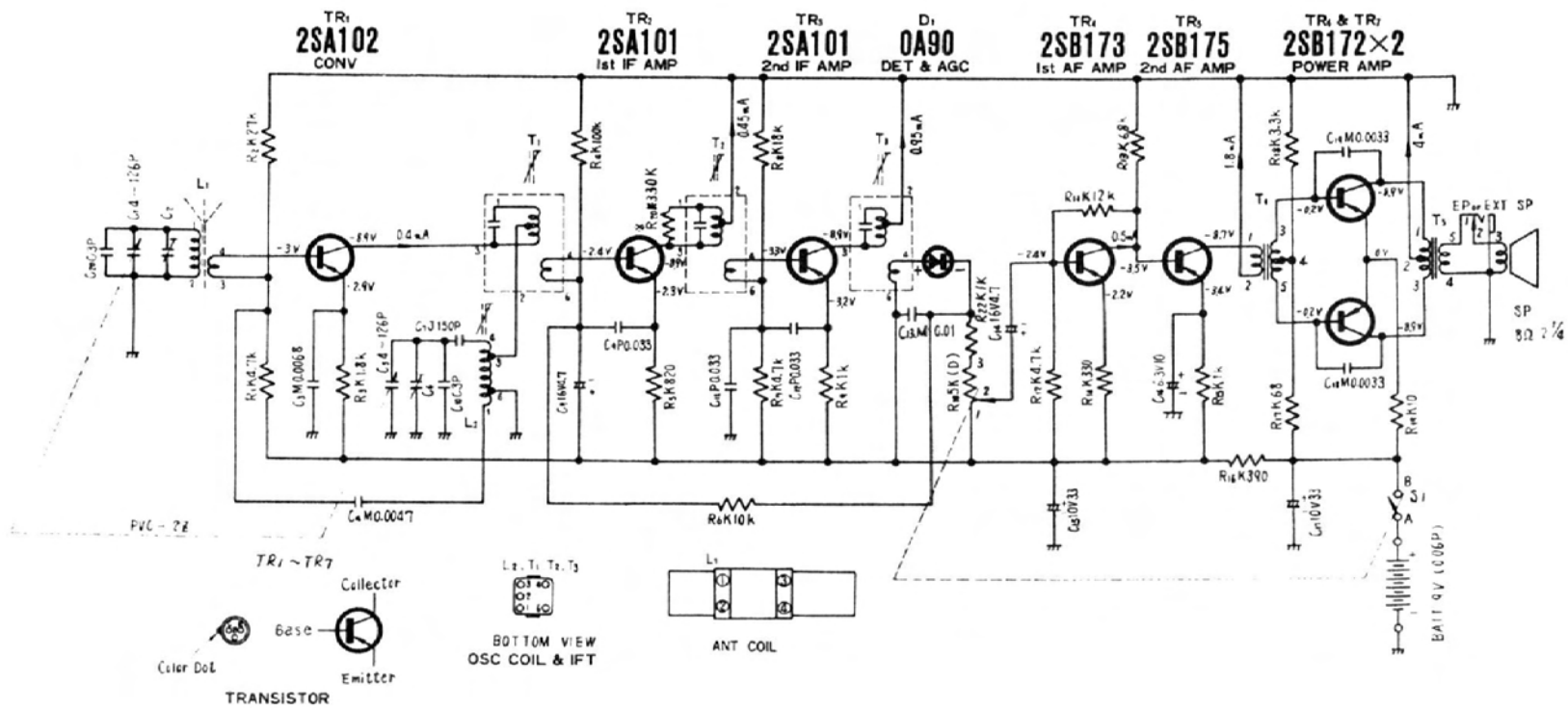

Notes:

1. S_1: Power source switch in "OFF" position.
2. DC voltage measurements are taken with circuit tester (10KΩ/V) from positive terminal of battery.
3. Capital letters (J, K, M, P, C) in the circuit diagram show allowable tolerance of resistors and capacitors as follows:
   J=±5% K=±10% M=±20% P=+100% − 0%
   C=±0.25PF
4. Battery Current: No Signal..... 10mA
   Maximum Output..... 55mA
5. PF=pico farad=mmf
   μF=micro farad=mfd
6. All resistor values in ohms (K=1000Ω).
7. All capacitor values in micro farads (P=mmf).

Fig. 5-5. Panasonic Model R-1329 AM portable radio. (Courtesy Matsushita Electric Corp. of America)

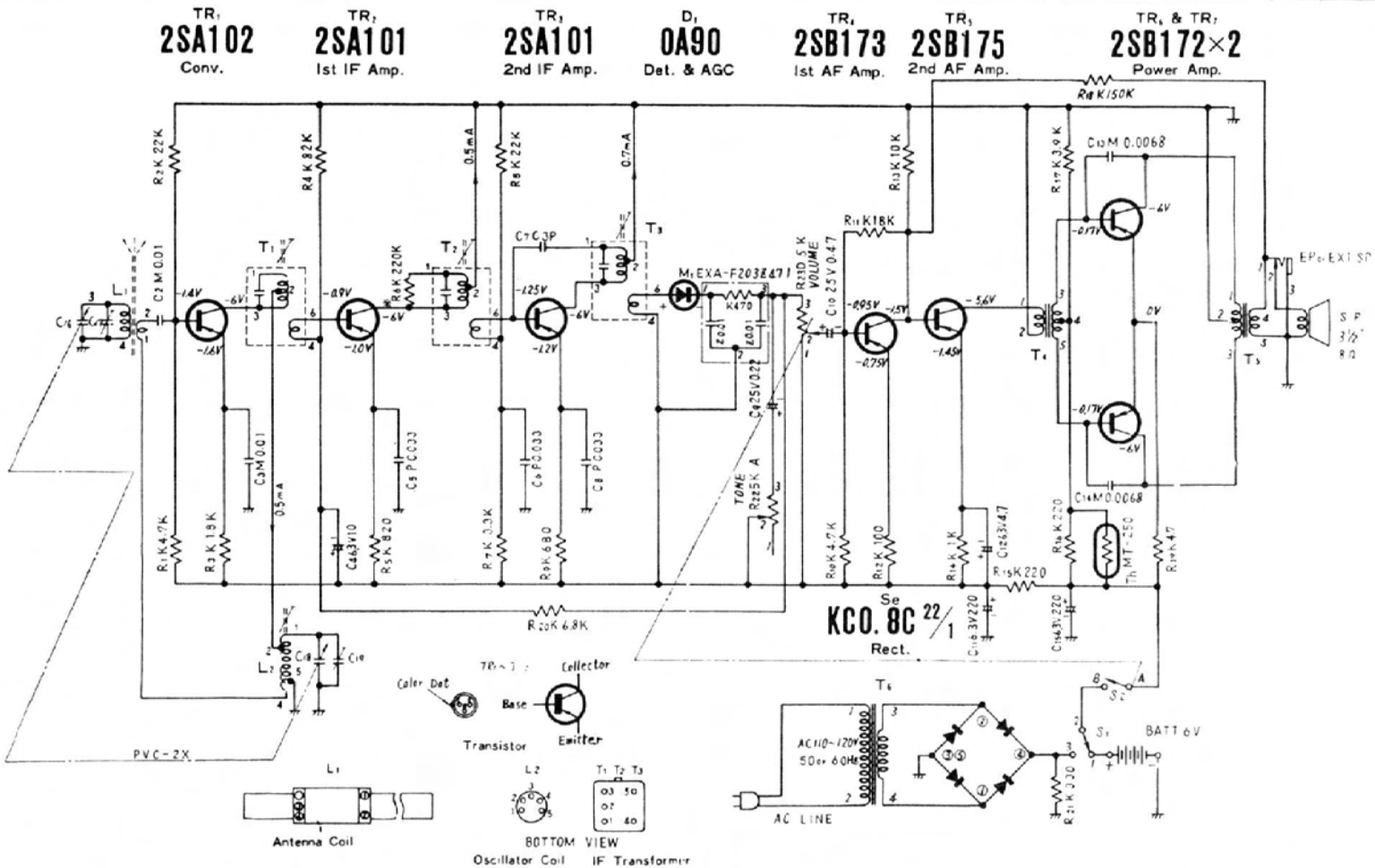

Notes :

1. S1 : AC-Battery selector switch in "Battery" position.
2. S2 : Power source switch in "OFF" position.
3. DC Voltage measurements are taken with circuit tester 10KΩ/volt from positive terminal of battery.
4. Capital letters (M, K, J, P, C) in the circuit diagram show allowable tolerance of resistors and capacitors as follows:
   M=±20% K=±10% J=±5% P=+100%
   C=±0.25PF − 0%
5. Battery current : No signal.....14mA
   Maximum output.....90mA
6. PF=pico farad=mmf
   μF=micro farad=mfd
7. All resistor values in ohms (K=1000Ω).
8. All capacitor values in micro farads (P=mmf).

Fig. 5-6. Penncrest Model 1624A AM radio (made by Matsushita Electric Corp. of America). (Courtesy J. C. Penney Co.)

TR-1	TR-2	TR-3	D-1	TR-4	TR-5	TR-6 & TR-7
CONV	1st I F AMP	2nd I F AMP	DET & AGC	1st A F AMP	2nd A F AMP	POWER AMP
2SA 100	**2SA 100**	**2SA 100**	**0A90**	**2SB171**	**2SB175**	**2SB176X2**

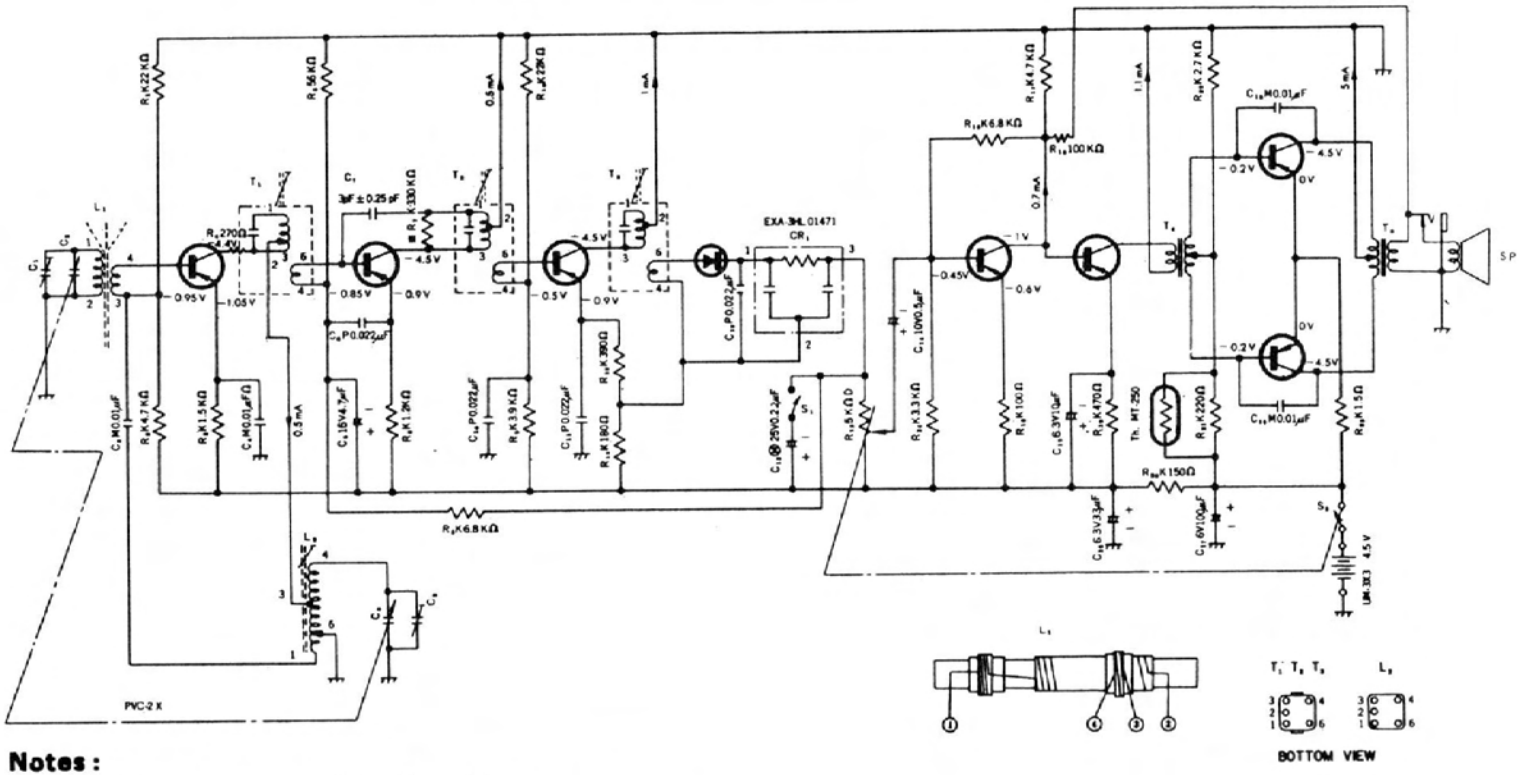

Notes:

1. S1: Tone switch in "High" position.
2. S2: Power source switch in "OFF" position.
3. DC voltage measurements are taken with circuit tester 10KΩ/volt from positive terminal of battery.
4. Capital letters (M, K, J, P, C) in the circuit diagram show allowable tolerance of resistors and capacitors as follows:
   M=±20% K=±10% J=±5% P=+100% −0%
5. PF=pico farad=mmf
   μF=micro farad=MF
6. All resistor values in ohms (K=1000Ω).
7. All capacitor values in micro farad (P=μμF).
8. Battery current: No signal..... 20 mA
   Maximum Output..... 115 mA

Fig. 5-7. Penncrest Model 1145 AM portable radio (made by Matsushita Electric Corp. of America). (Courtesy J. C. Penney Co.)

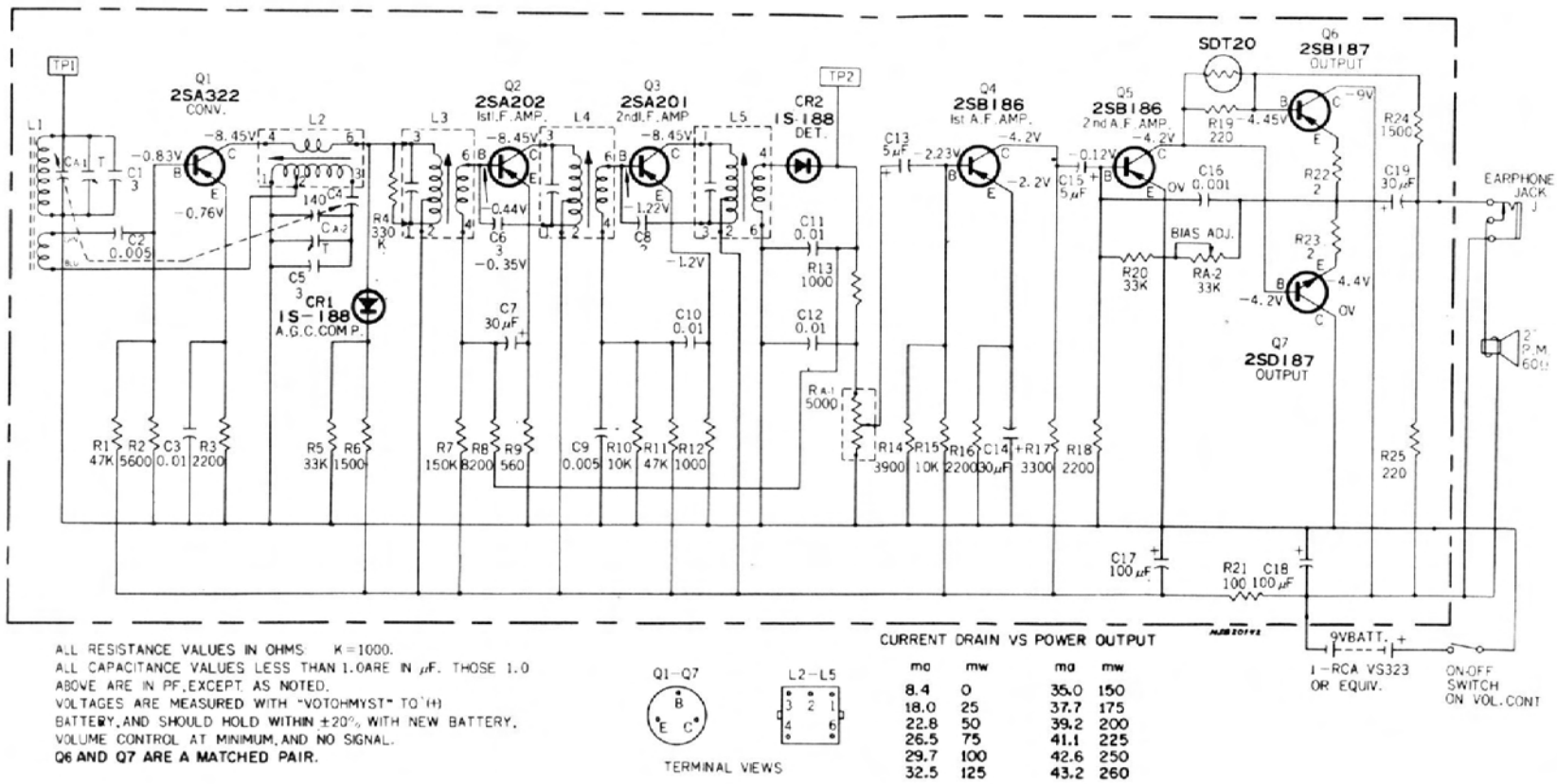

ALL RESISTANCE VALUES IN OHMS. K=1000.
ALL CAPACITANCE VALUES LESS THAN 1.0ARE IN μF. THOSE 1.0 ABOVE ARE IN PF, EXCEPT AS NOTED.
VOLTAGES ARE MEASURED WITH "VOTOHMYST" TO (+) BATTERY, AND SHOULD HOLD WITHIN ±20% WITH NEW BATTERY.
VOLUME CONTROL AT MINIMUM, AND NO SIGNAL.
Q6 AND Q7 ARE A MATCHED PAIR.

Q1–Q7

L2–L5

TERMINAL VIEWS

CURRENT DRAIN VS POWER OUTPUT

ma	mw	ma	mw
8.4	0	35.0	150
18.0	25	37.7	175
22.8	50	39.2	200
26.5	75	41.1	225
29.7	100	42.6	250
32.5	125	43.2	260

1 – RCA VS323 OR EQUIV.

Fig. 5-8. RCA Model RCG 111, 120 AM portable radio. (Courtesy RCA)

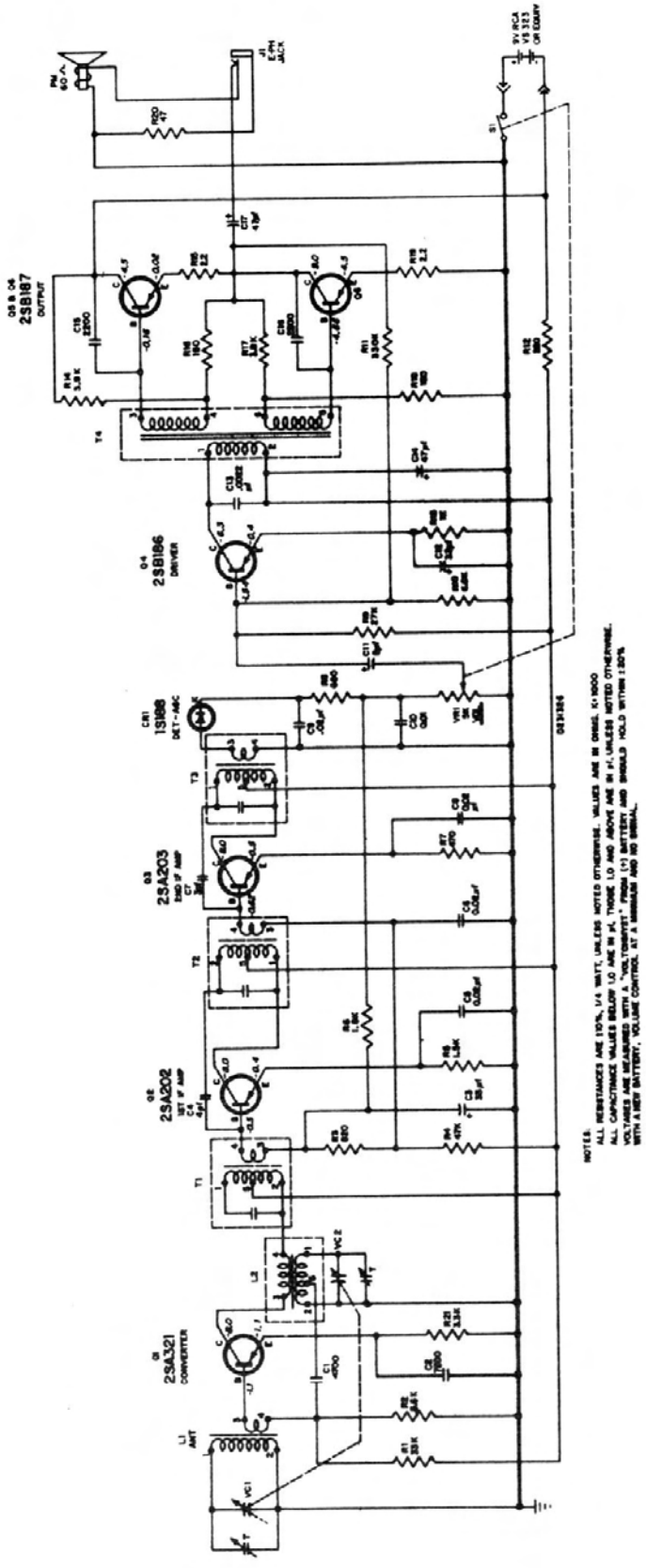

Fig. 5-9. RCA Model RZG 107 AM portable radio. (Courtesy RCA)

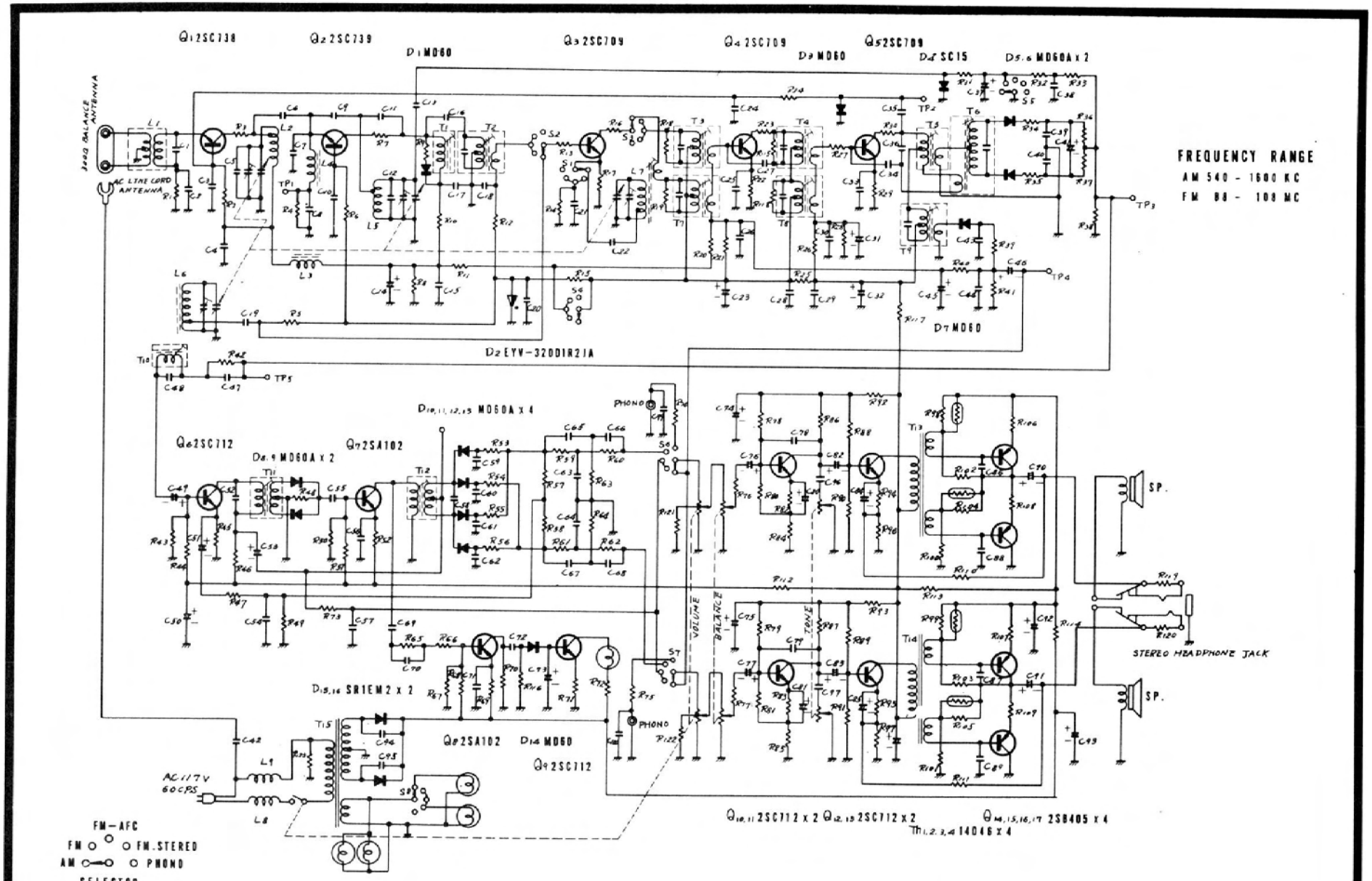

Fig. 5-10. Allied Model 2691 AM-FM radio. (Courtesy Allied Radio Corp.)

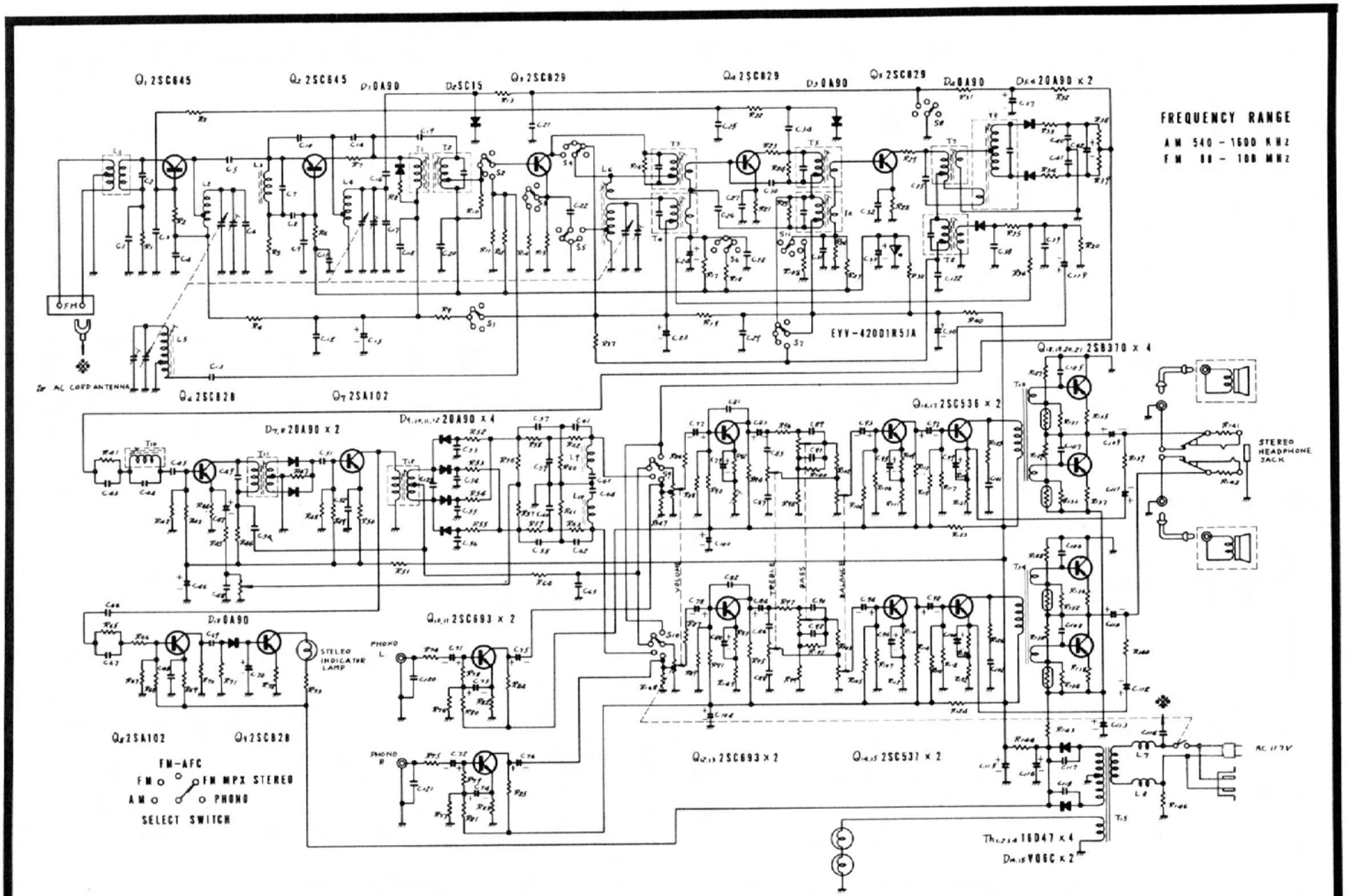

Fig. 5-11. Allied Model 2600 AM-FM radio. (Courtesy Allied Radio Corp.)

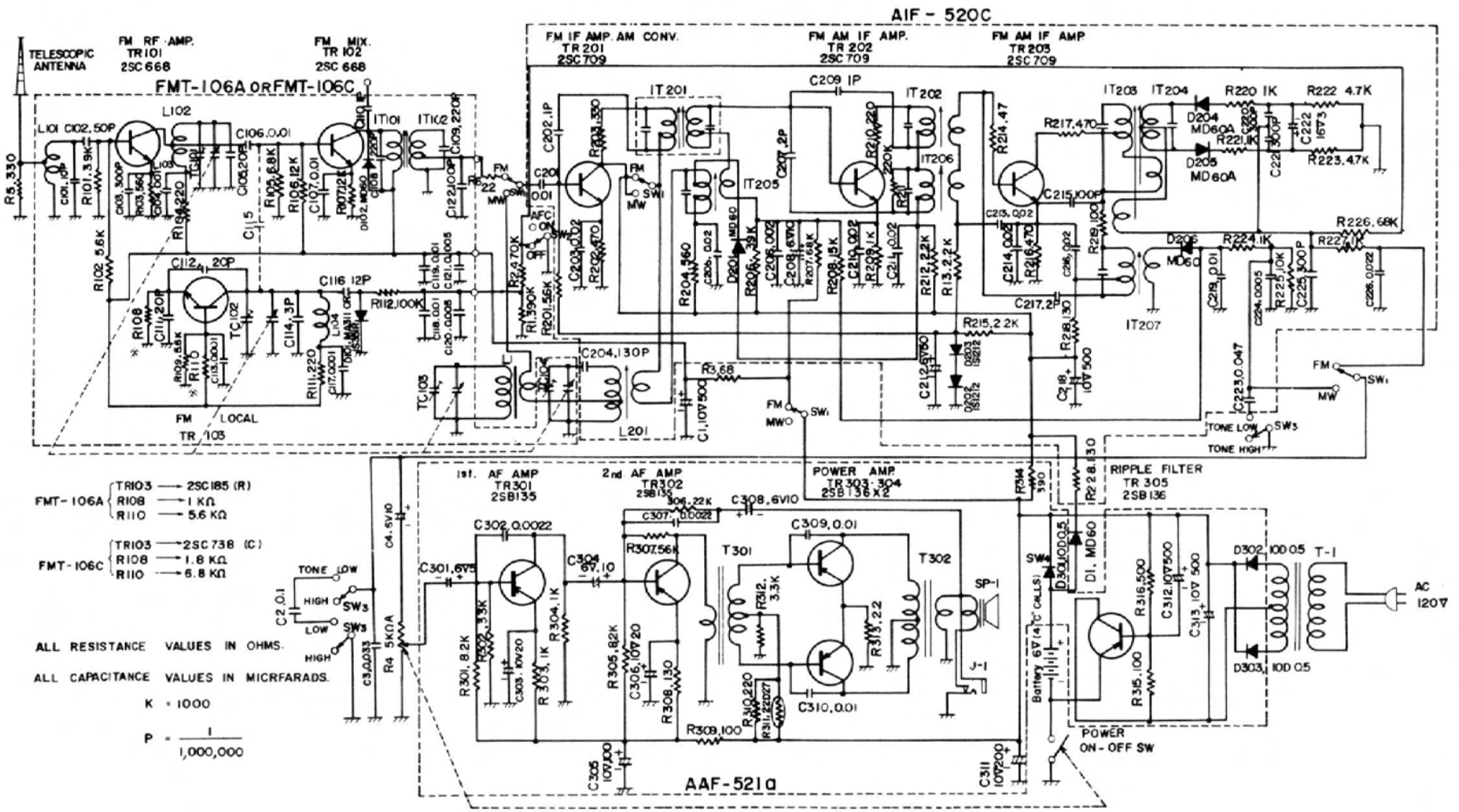

Fig. 5-12. Emerson Model 31P75 AM-FM, AC-DC radio. (Courtesy Emerson TV & Radio)

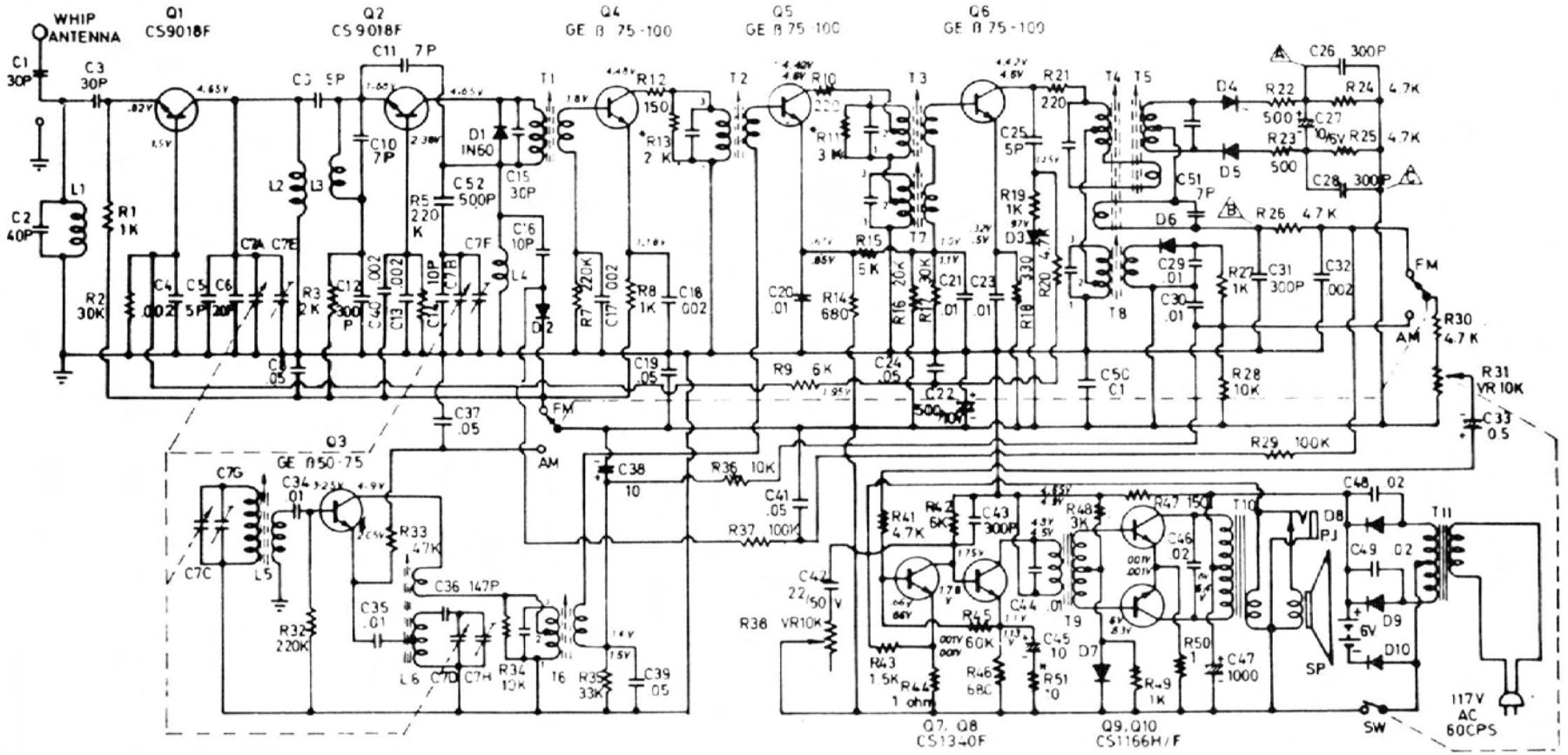

Fig. 5-13. Emerson Model 31P67 AM-FM radio. (Courtesy Emerson TV & Radio)

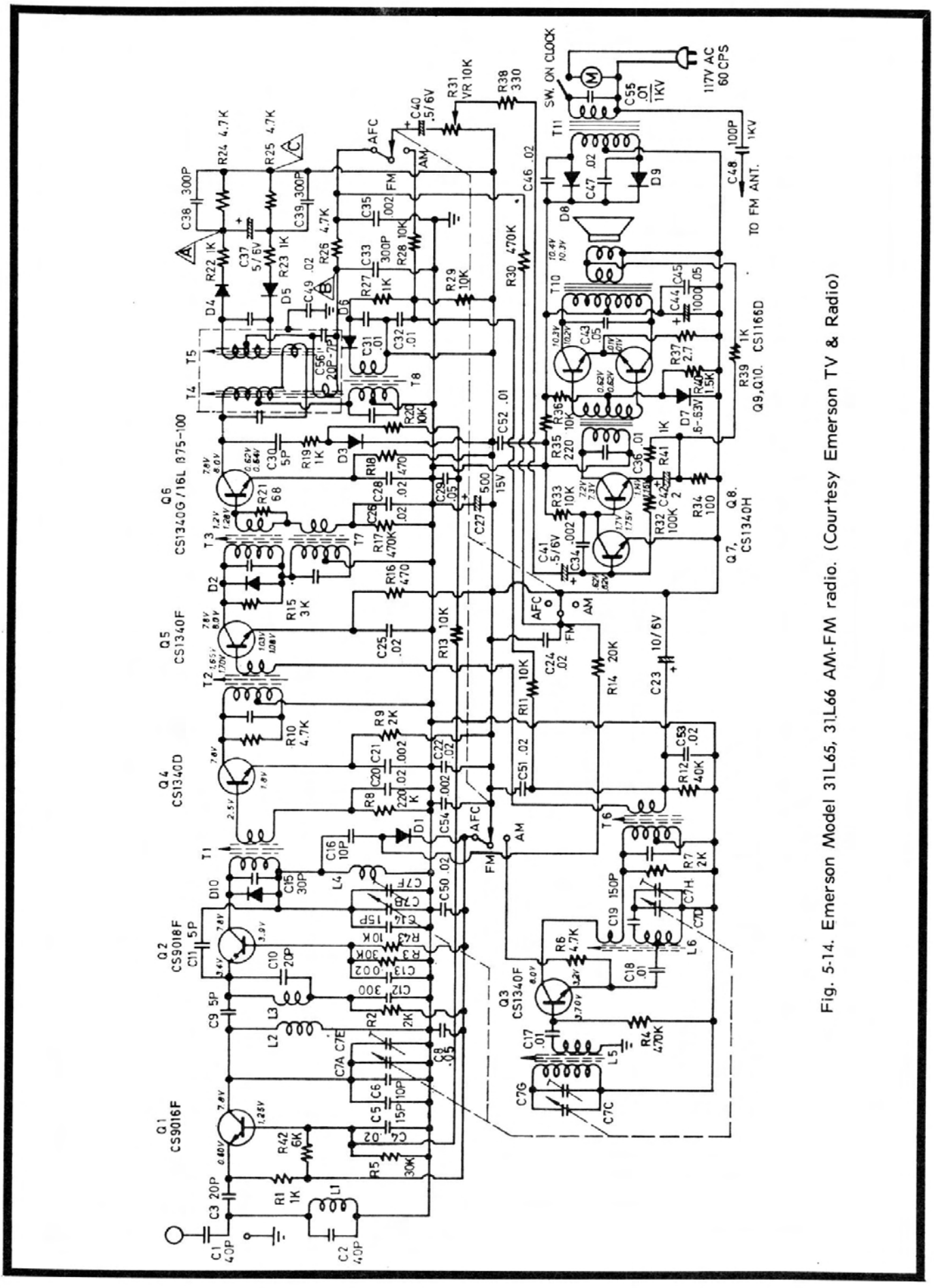

Fig. 5-14. Emerson Model 31L65, 31L66 AM-FM radio. (Courtesy Emerson TV & Radio)

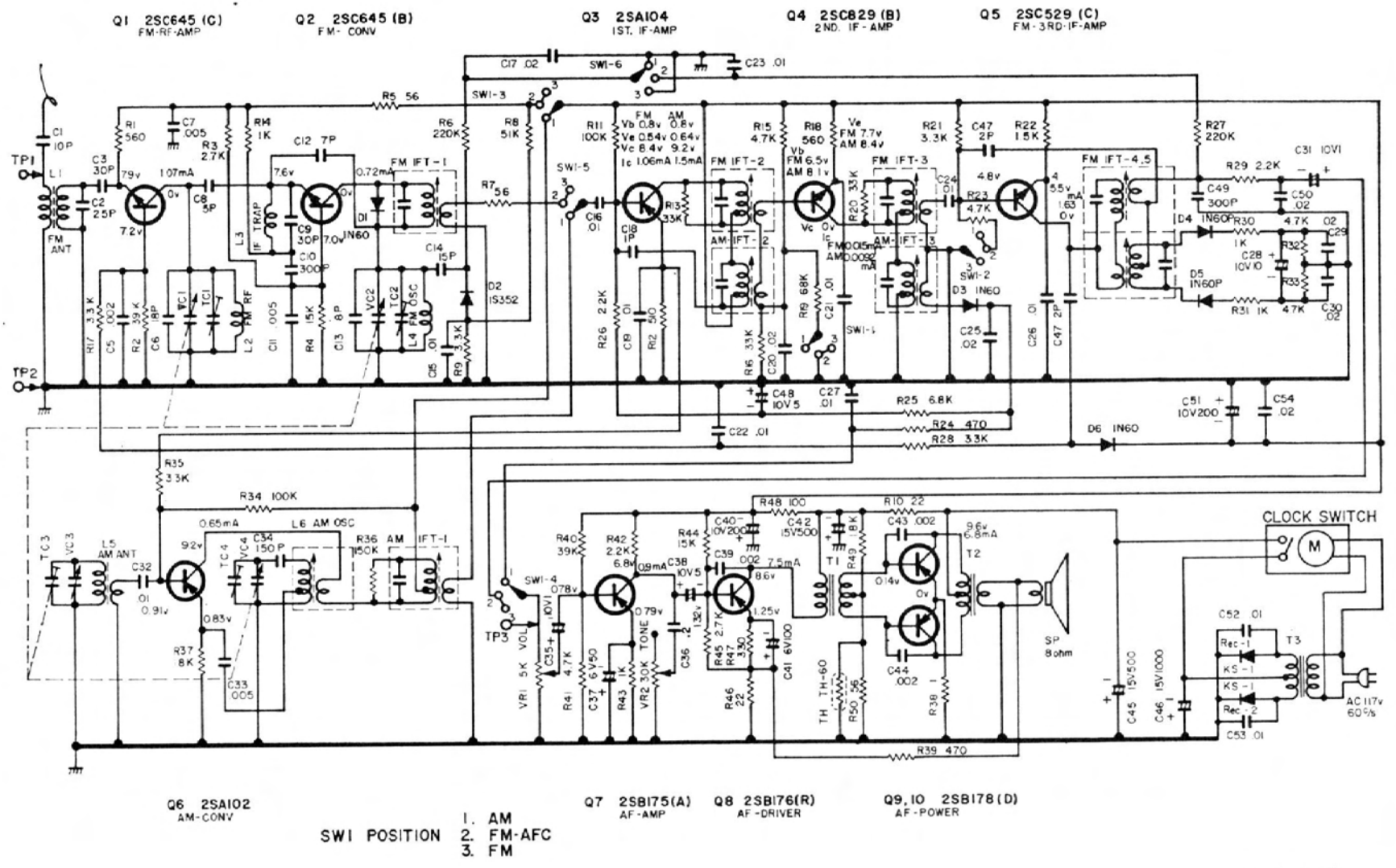

Fig. 5-15. Lloyd's Model 9J41-100A AM-FM radio. (Courtesy Lloyd's Electronics, Inc.)

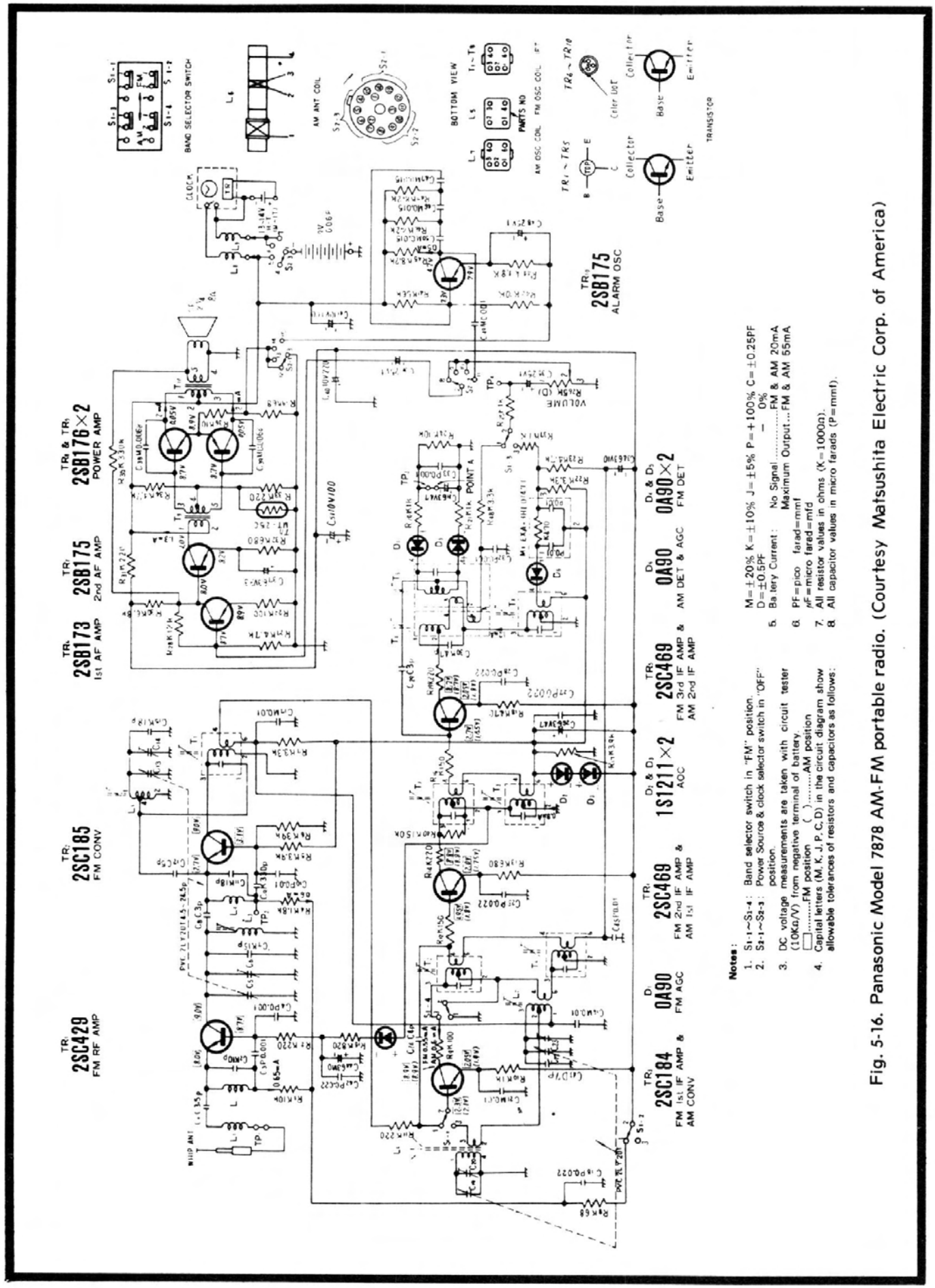

Fig. 5-16. Panasonic Model 7878 AM-FM portable radio. (Courtesy Matsushita Electric Corp. of America)

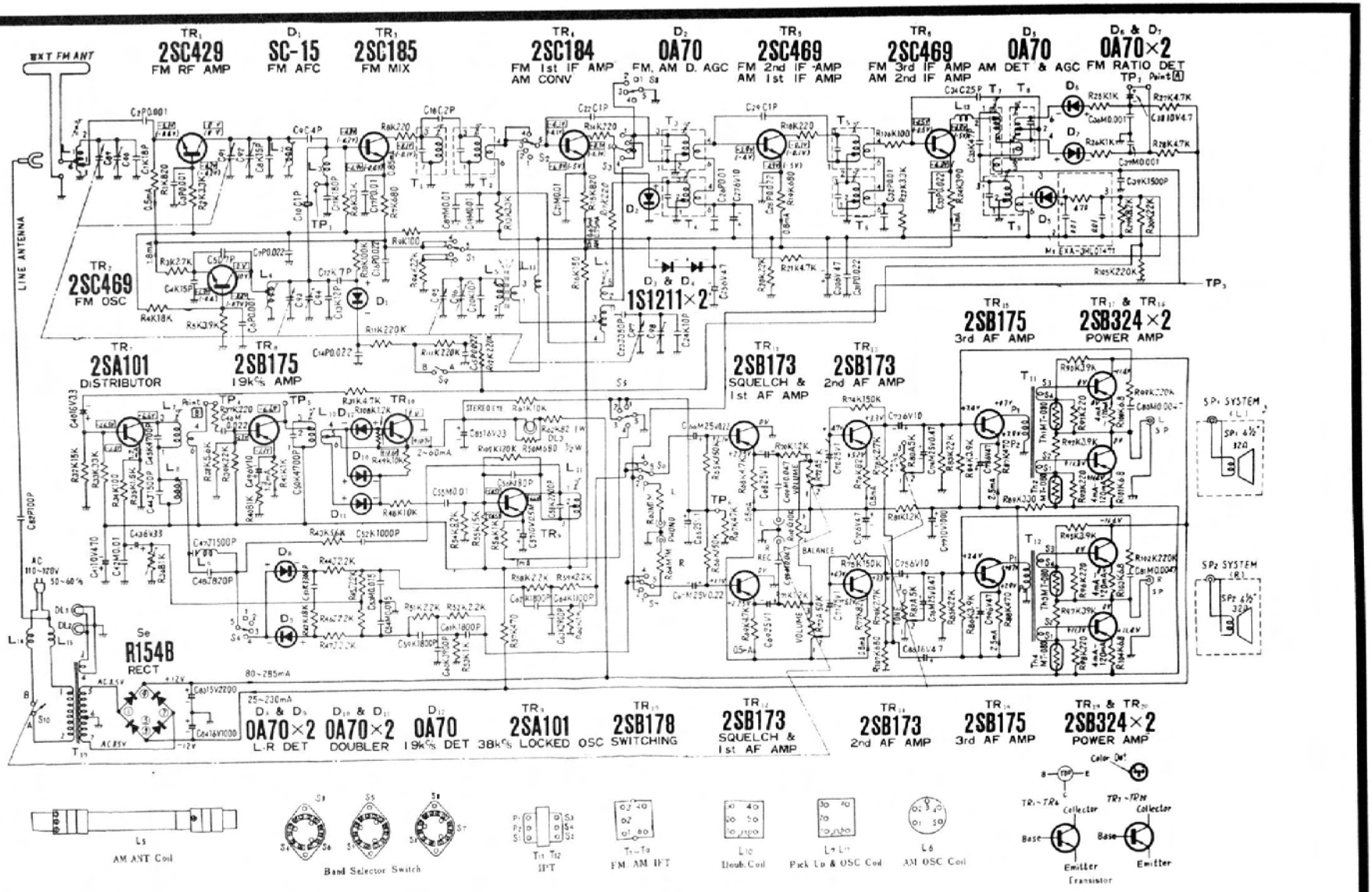

Notes :

1. S1~S8 : Band selector switch in "FM" position.
2. S9 : AFC switch in "ON" position.
3. S10 : Power source switch in "OFF" position.
4. DC Voltage measurements are taken with circuit tester 10 KΩ/volt from chassis.
   □.....FM Position ( ).....AM Position
5. Capital letters (M, K, J, P, C, D) in the circuit diagram show allowable tolerance of resistors and capacitors as follows:
   M=±20% K=±10% J=±5% P=+100% C=±0.25PF D=±0.5PF −0%
6. PF=pico farad=mmf
   μF=micro farad=mfd
7. All resistor values in ohms (K=1000Ω).
8. All capacitor values in micro farads (P=mmf).

Fig. 5-17. Penncrest Model 5905 AM-FM multiplex receiver. (Courtesy J. C. Penney Co.)

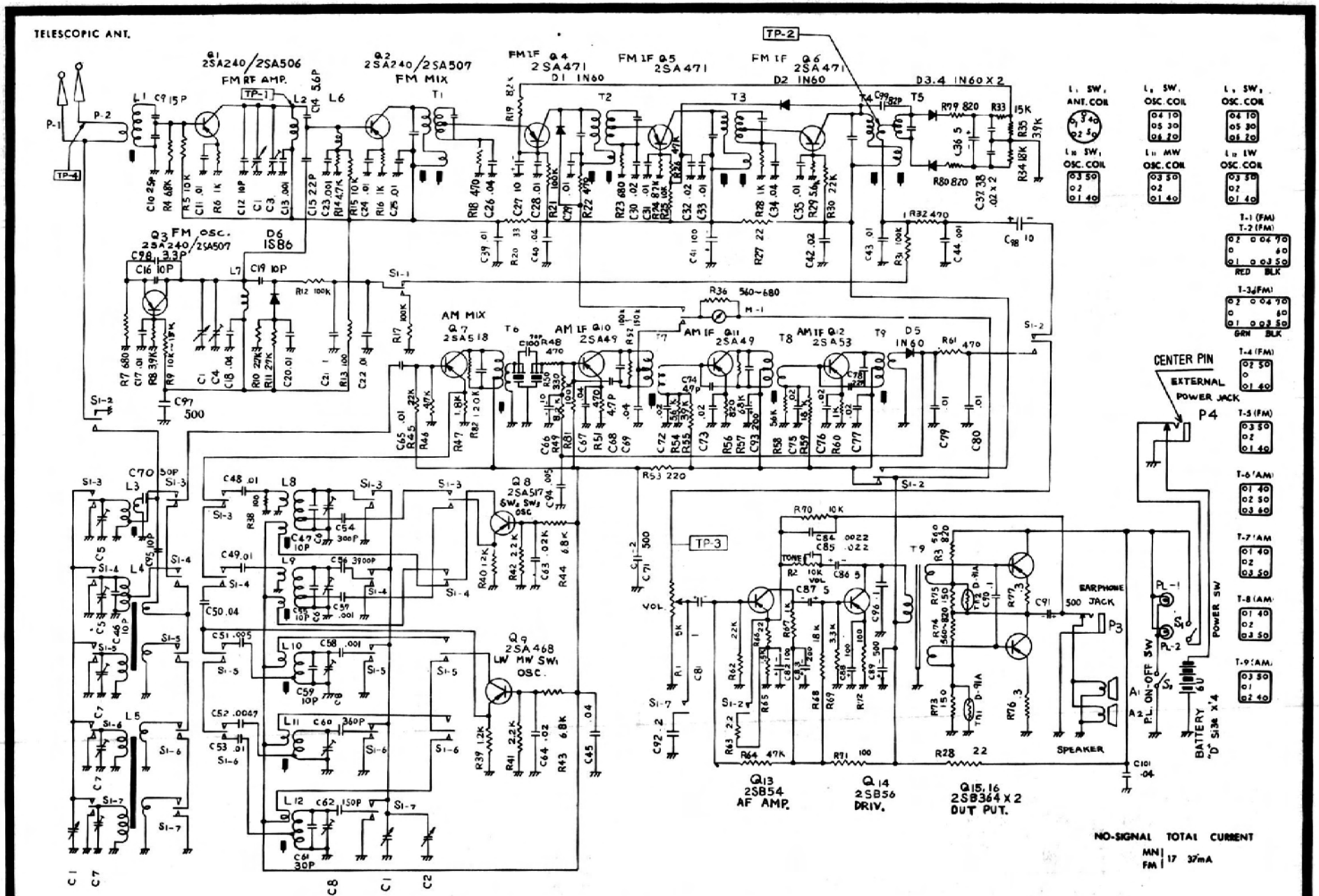

Fig. 5-18. Penncrest Model 1903A AM-FM portable radio. (Courtesy J. C. Penney Co.)

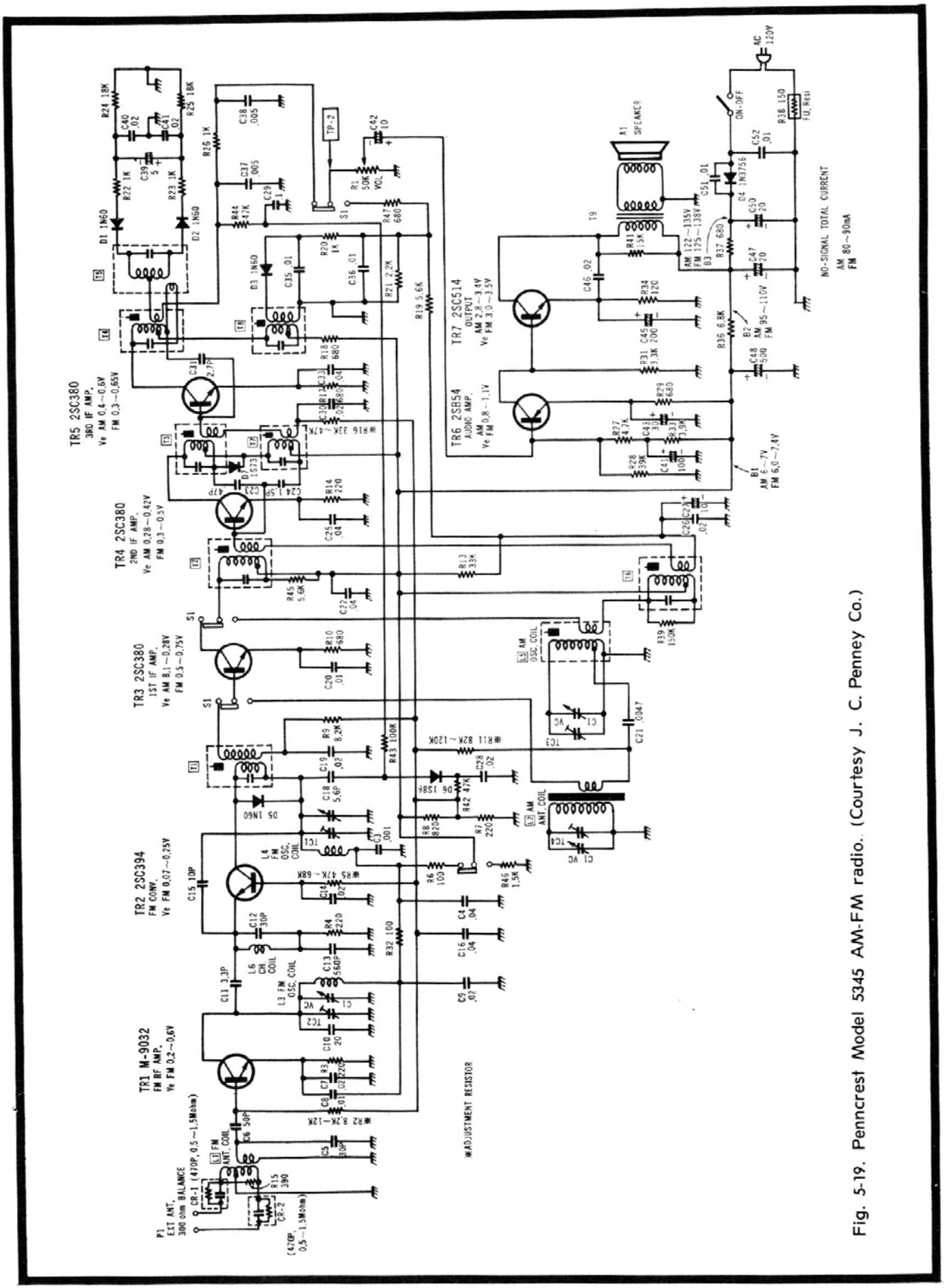

Fig. 5-19. Penncrest Model 5345 AM-FM radio. (Courtesy J. C. Penney Co.)

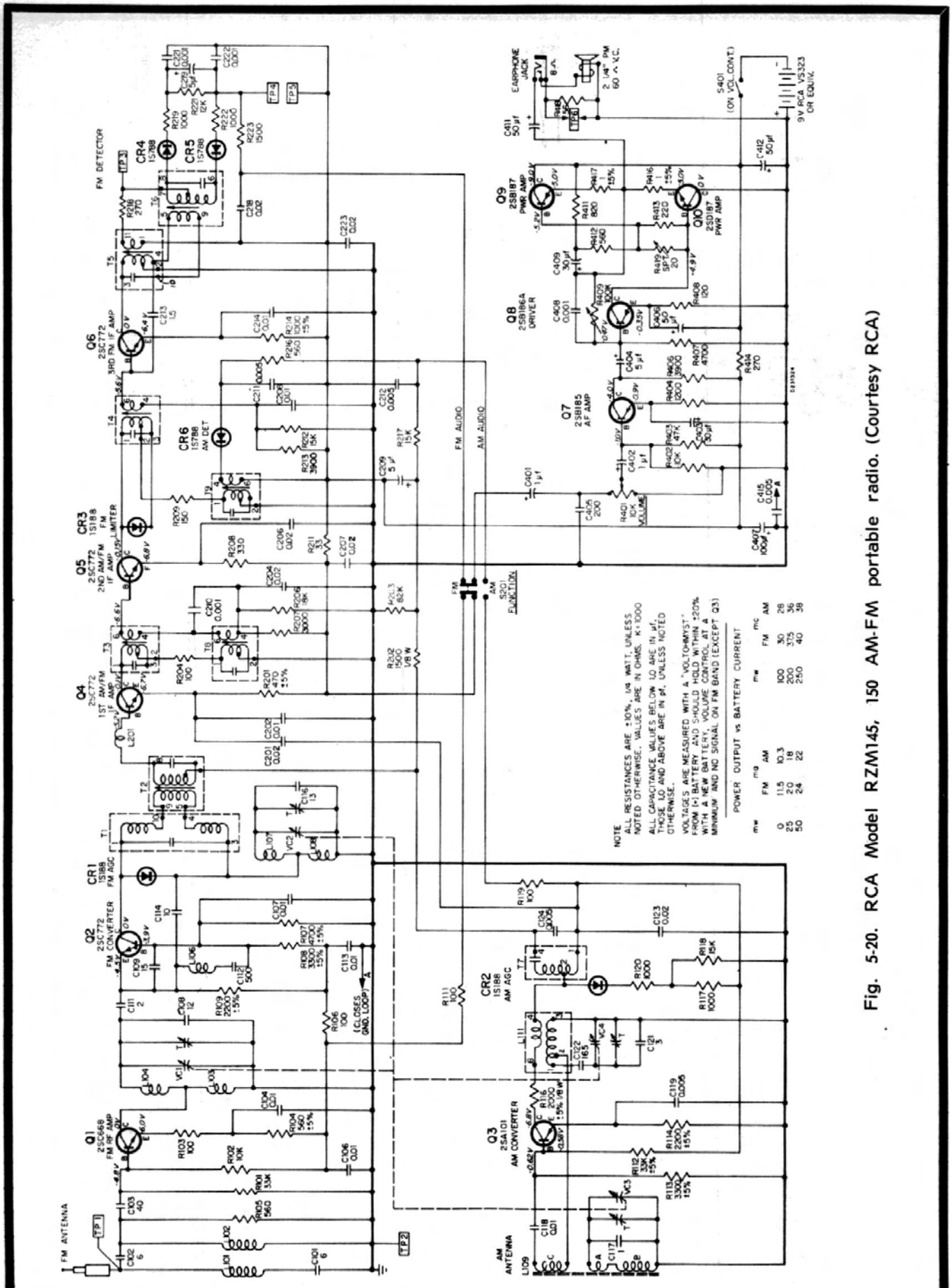

Fig. 5-20. RCA Model RZM145, 150 AM-FM portable radio. (Courtesy RCA)

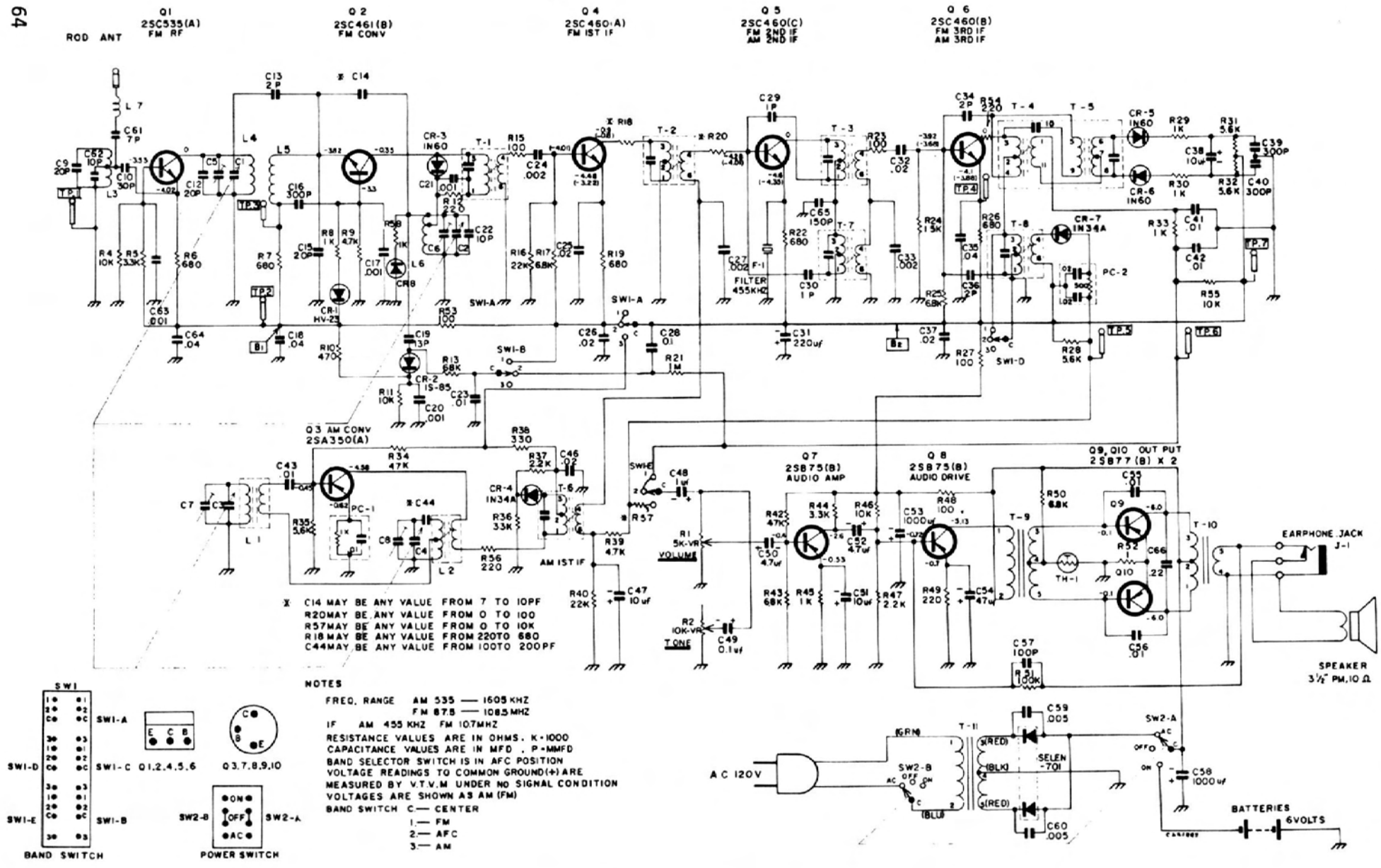

Fig. 5-21. RCA Model RZM177 AM-FM radio. (Courtesy RCA)

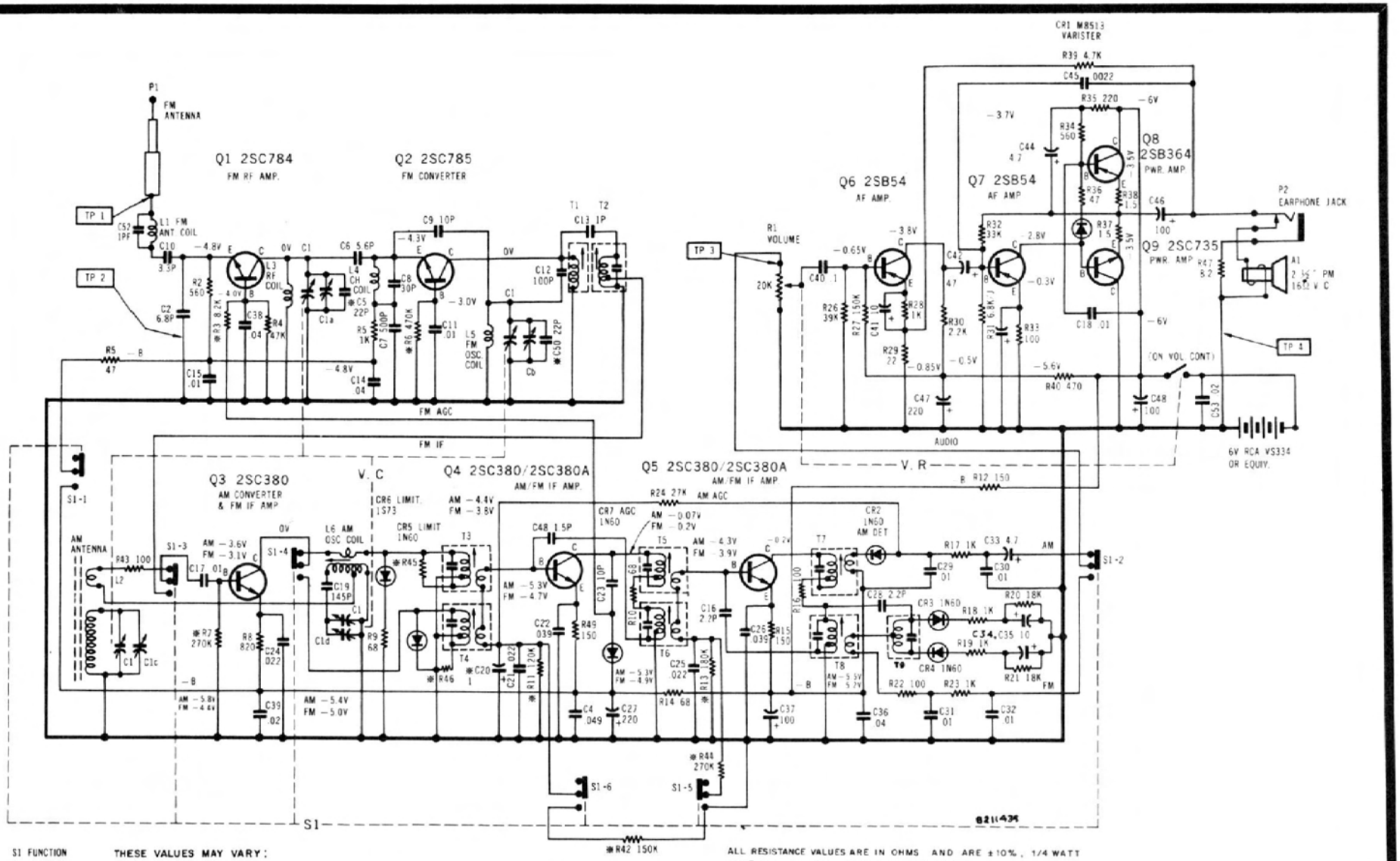

Fig. 5-22. RCA Model RZM160 AM-FM radio (Courtesy RCA)

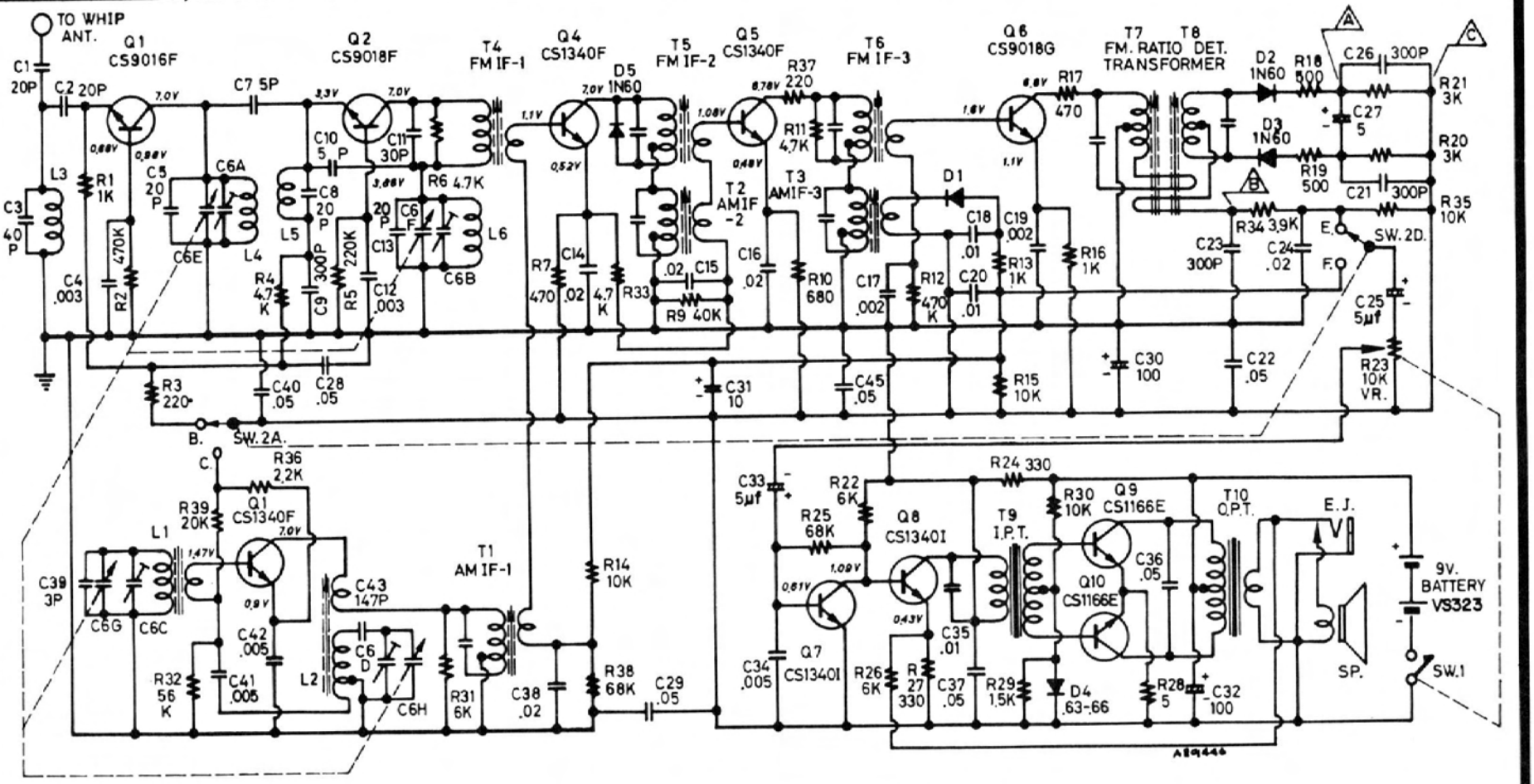

NOTES:

ALL RESISTANCES ARE ±10%, 1/4 WATT, UNLESS NOTED OTHERWISE. VALUES ARE IN OHMS. K=1000.

ALL CAPACITANCE VALUES ARE IN µf, UNLESS NOTED OTHERWISE.

VOLTAGES ARE MEASURED WITH A VOLTOHMYST FROM (–) BATTERY AND SHOULD HOLD WITH ±20% WITH A NEW BATTERY, VOLUME CONTROL AT MINIMUM AND NO SIGNAL.

TOTAL CURRENT AM	TOTAL CURRENT FM	OUTPUT POWER
9.6 (mA)	10 (mA)	MIN. (mW)
24	20	50
25	28	100
36	40	200
50	49	MAX.

Fig. 5-23. RCA Model RZM140 AM-FM radio. (Courtesy RCA)

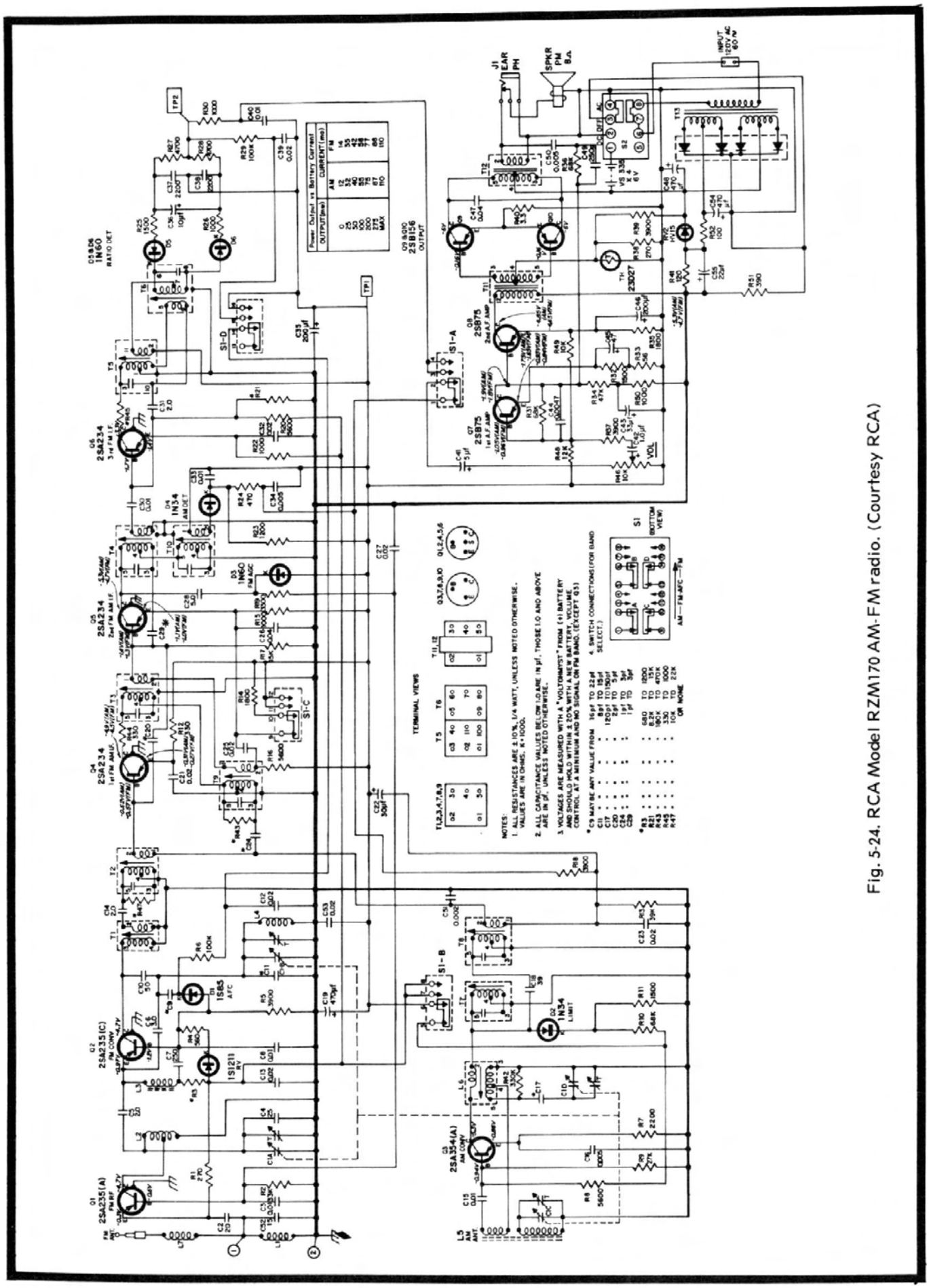

Fig. 5-24. RCA Model RZM170 AM-FM radio. (Courtesy RCA)

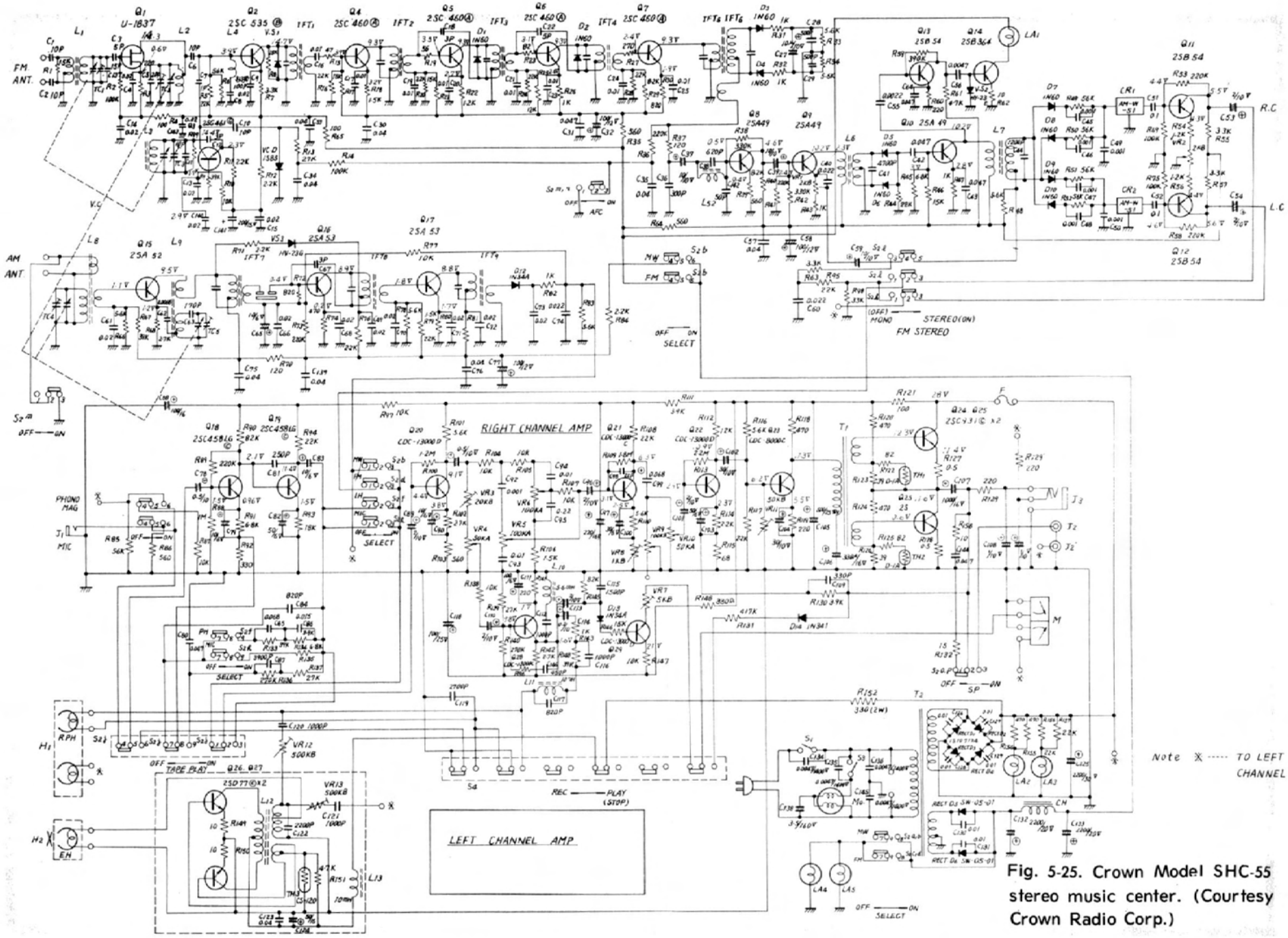

Fig. 5-25. Crown Model SHC-55 stereo music center. (Courtesy Crown Radio Corp.)

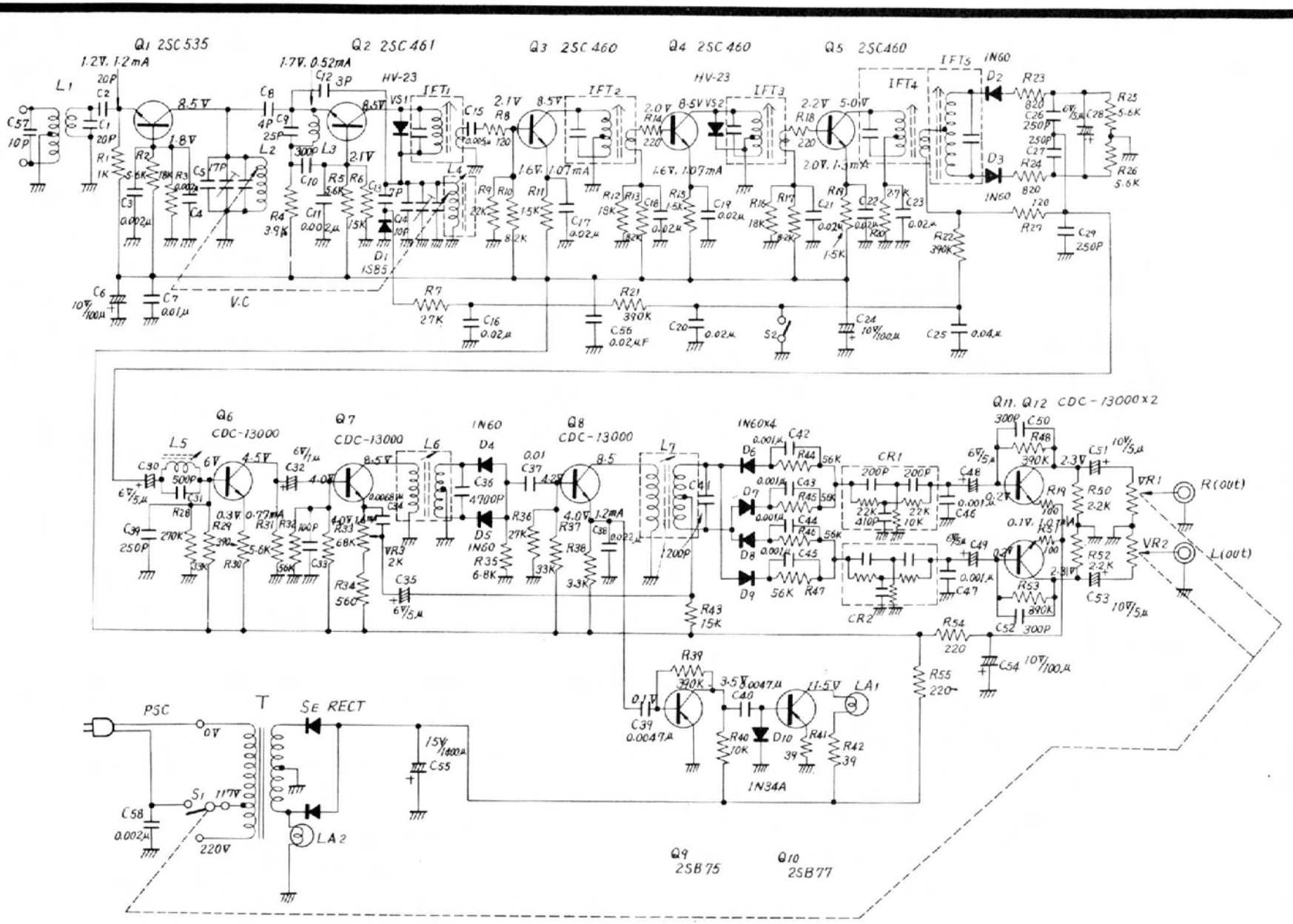

Fig. 5-26. Crown Model FM-300 FM stereo tuner. (Courtesy Crown Radio Corp.)

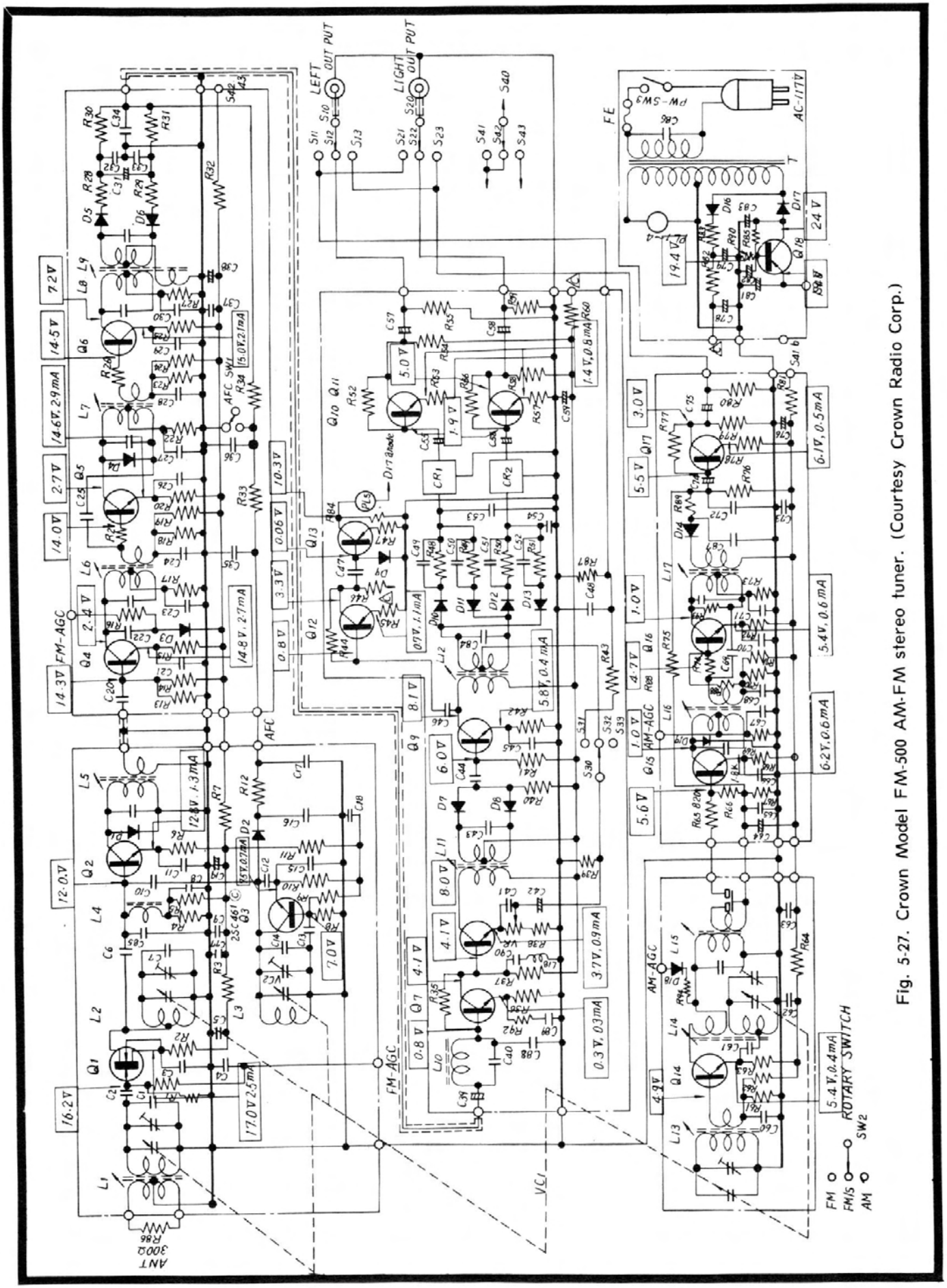

Fig. 5-27. Crown Model FM-500 AM-FM stereo tuner. (Courtesy Crown Radio Corp.)

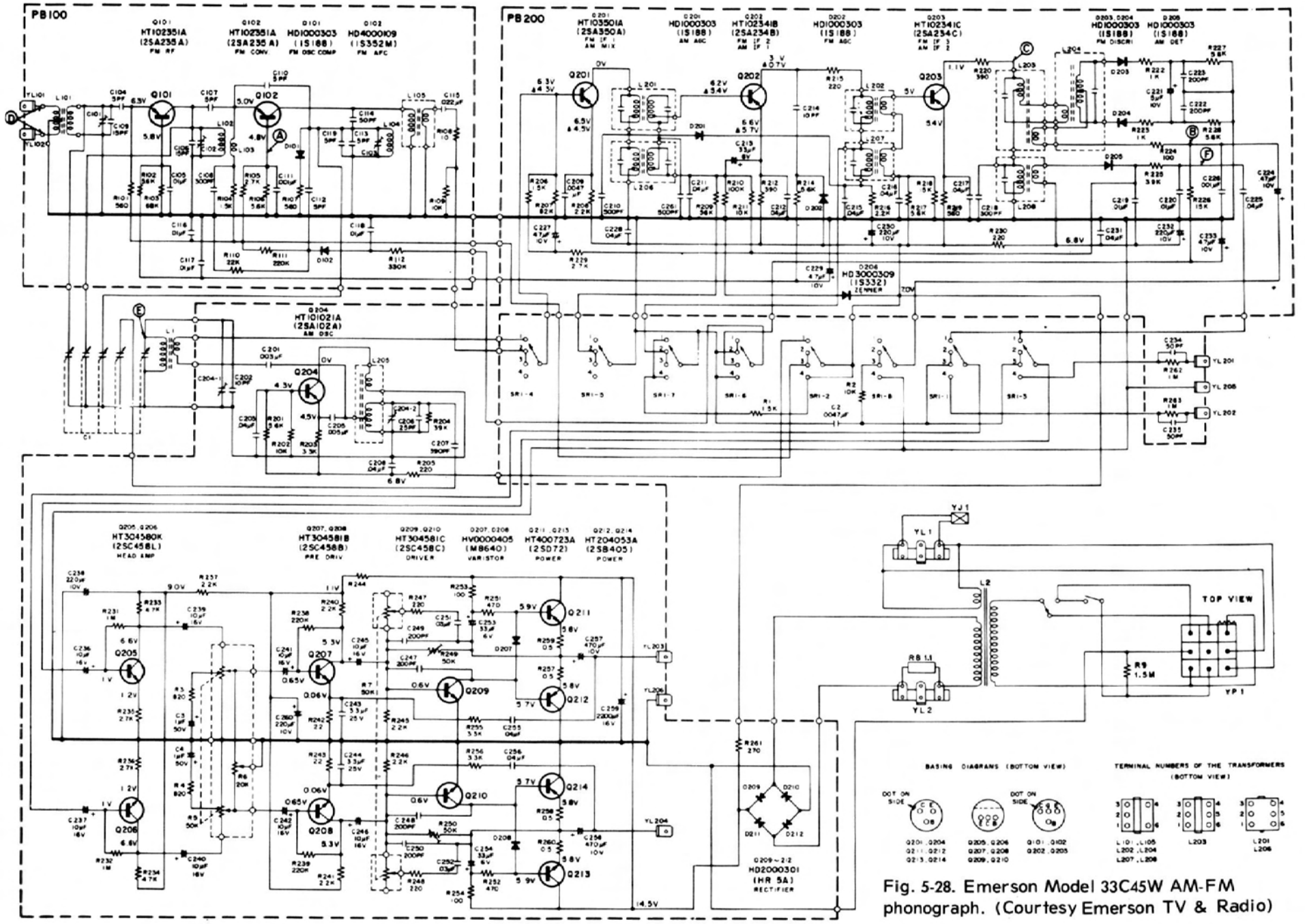

Fig. 5-28. Emerson Model 33C45W AM-FM phonograph. (Courtesy Emerson TV & Radio)

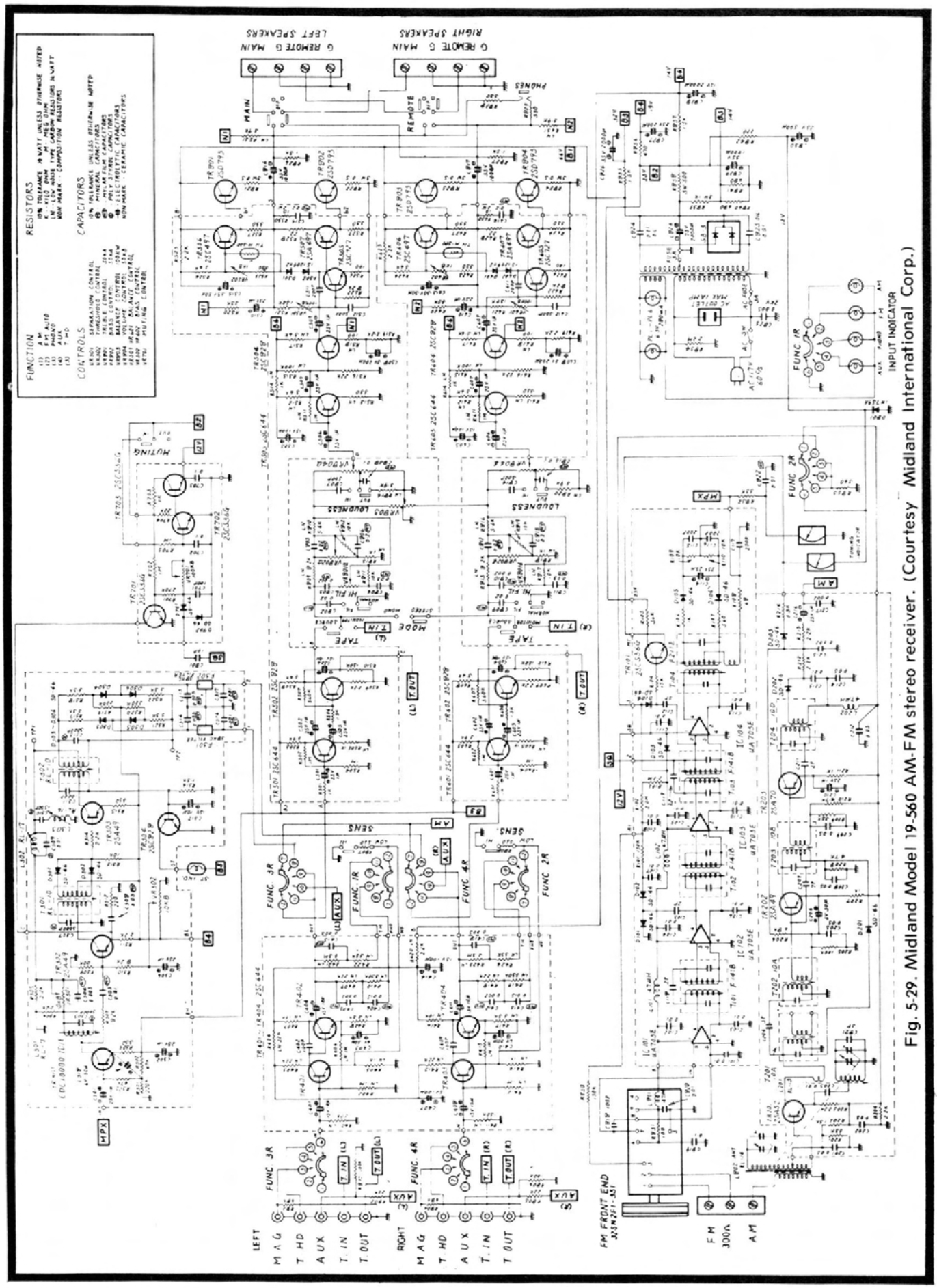

Fig. 5-29. Midland Model 19-560 AM-FM stereo receiver. (Courtesy Midland International Corp.)

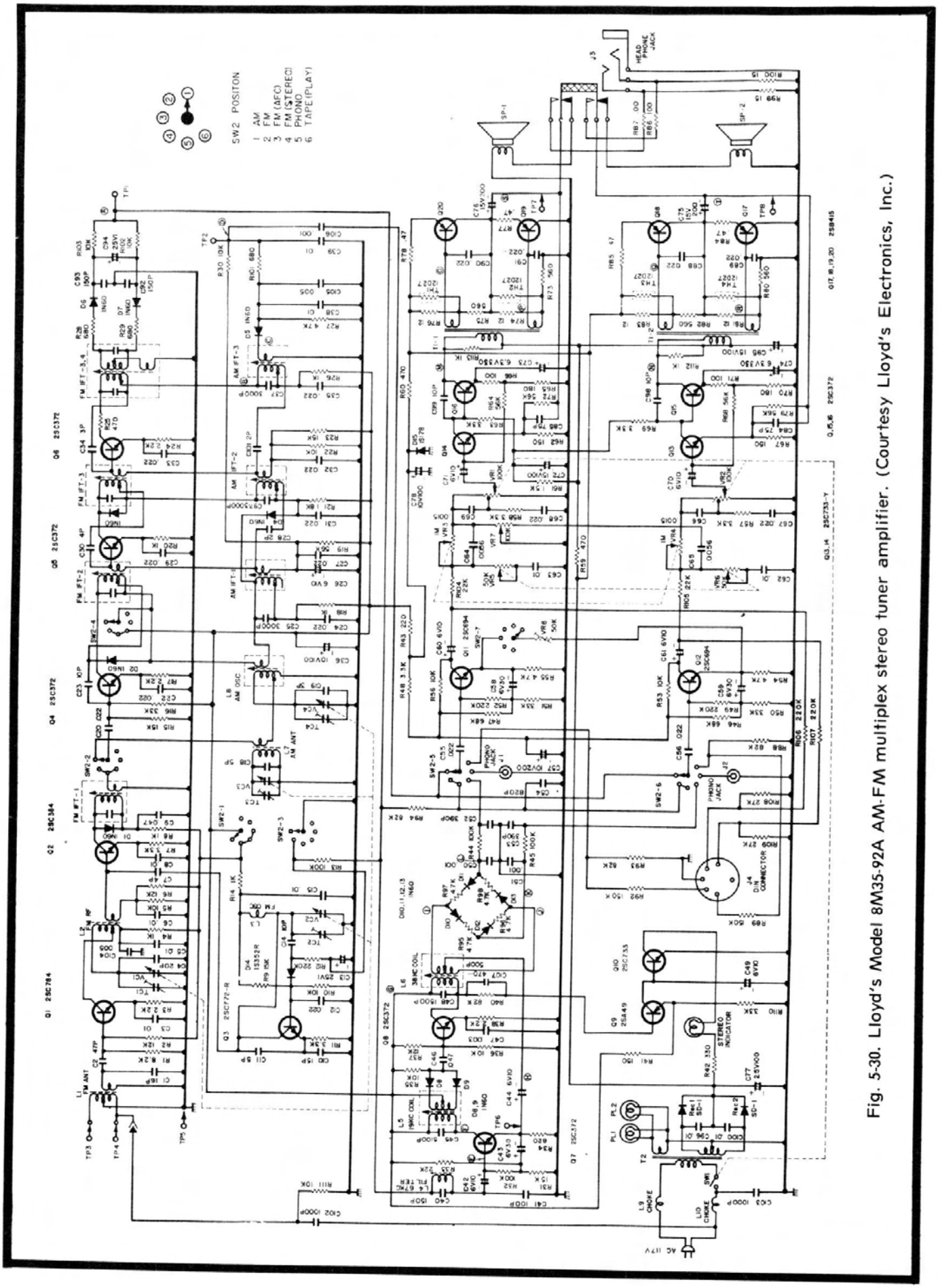

Fig. 5-30. Lloyd's Model 8M35-92A AM-FM multiplex stereo tuner amplifier. (Courtesy Lloyd's Electronics, Inc.)

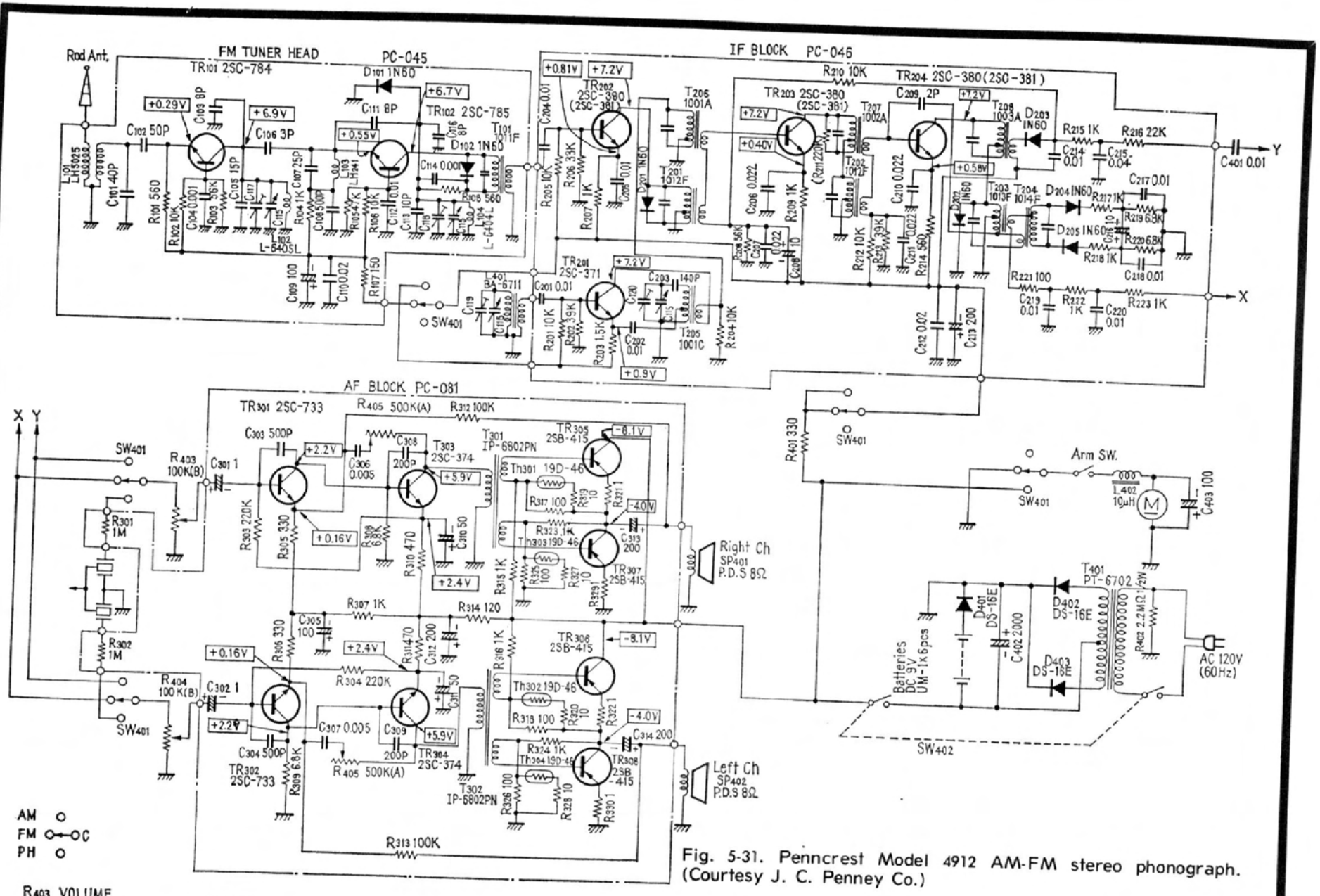

Fig. 5-31. Penncrest Model 4912 AM-FM stereo phonograph. (Courtesy J. C. Penney Co.)

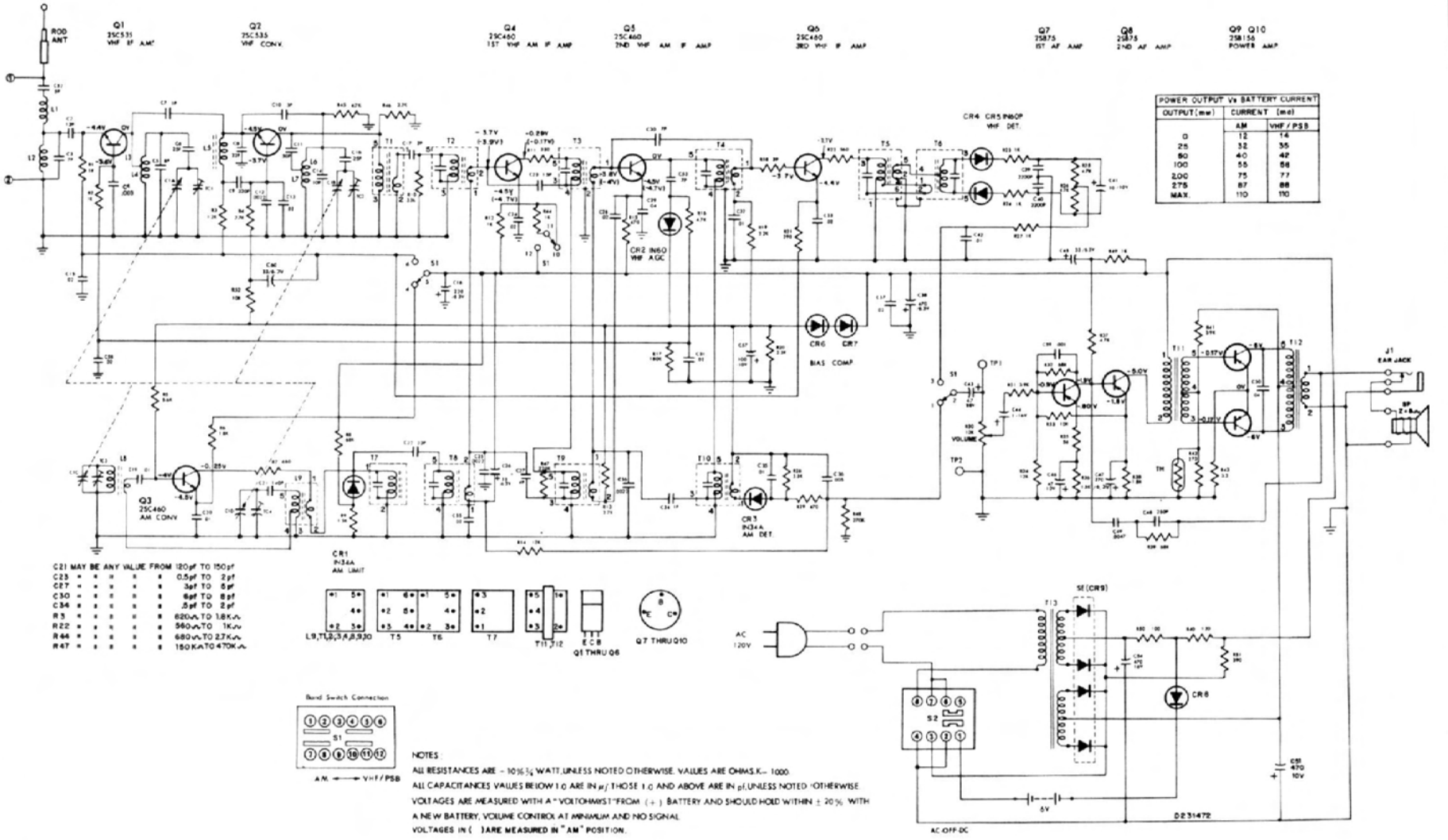

Fig. 5-32. RCA Model 990-K AM-VHF receiver. (Courtesy RCA)

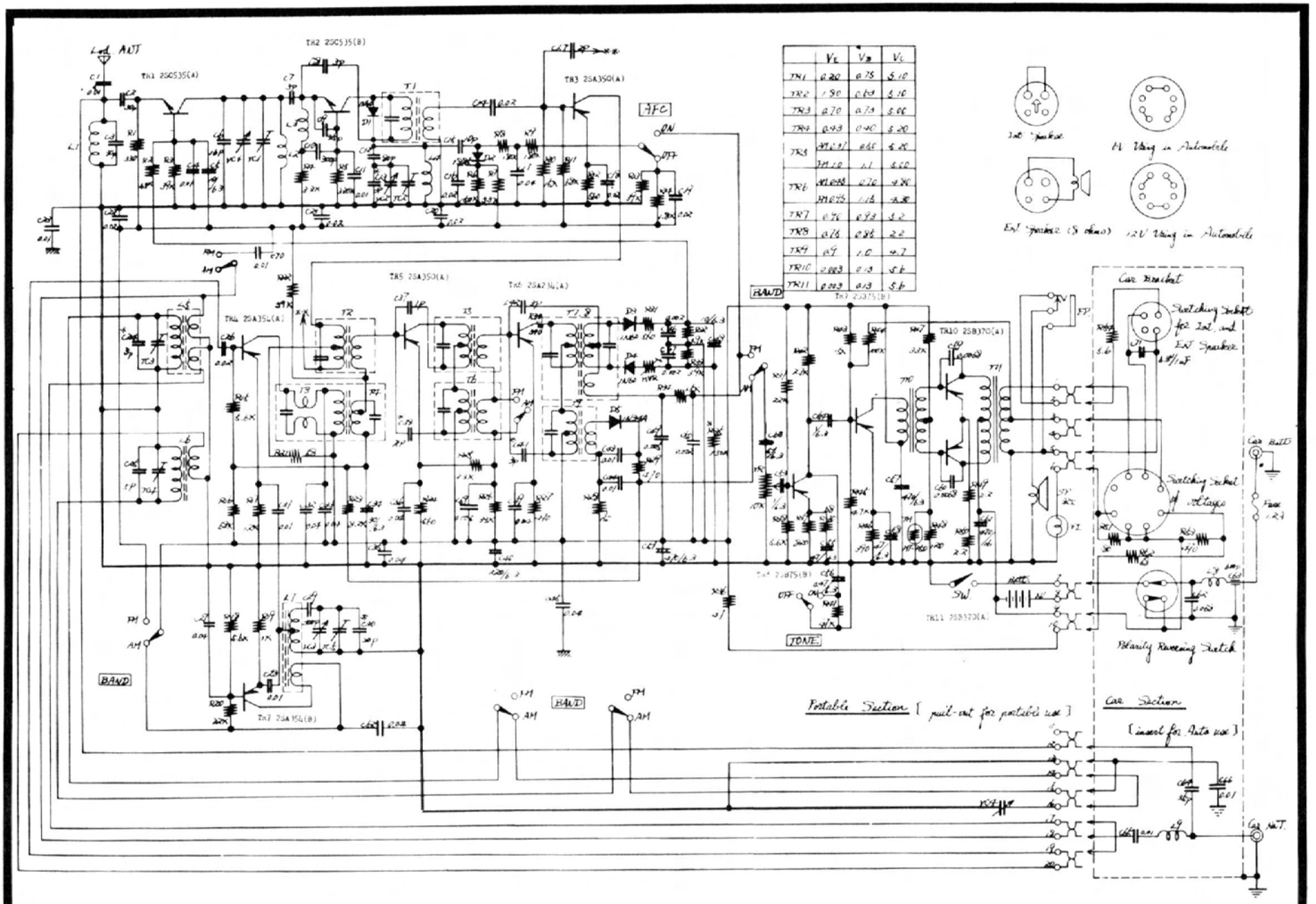

Fig. 5-33. Medallion Model 65-225 AM-FM auto radio. (Courtesy Midland International Corp.)

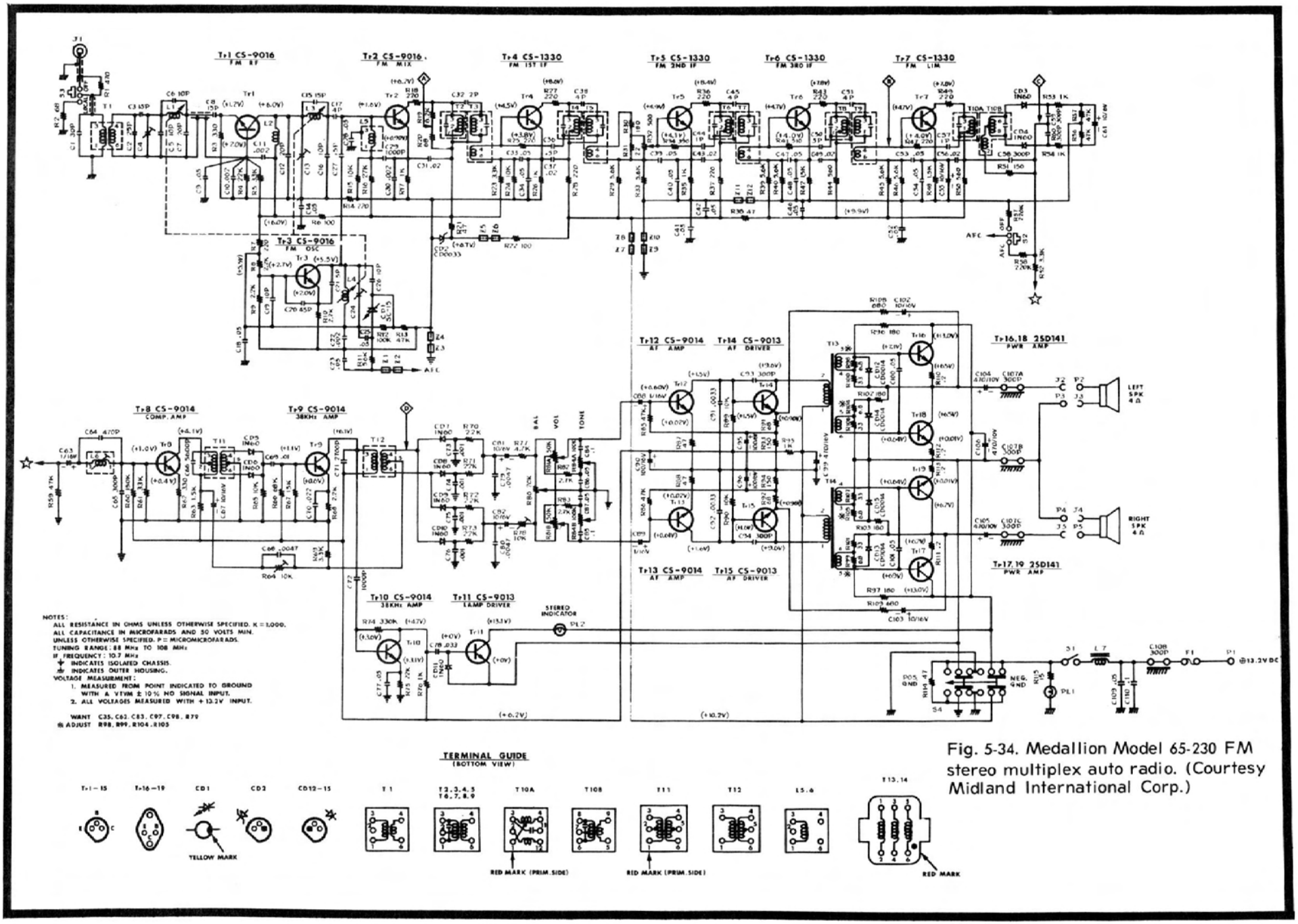

Fig. 5-34. Medallion Model 65-230 FM stereo multiplex auto radio. (Courtesy Midland International Corp.)

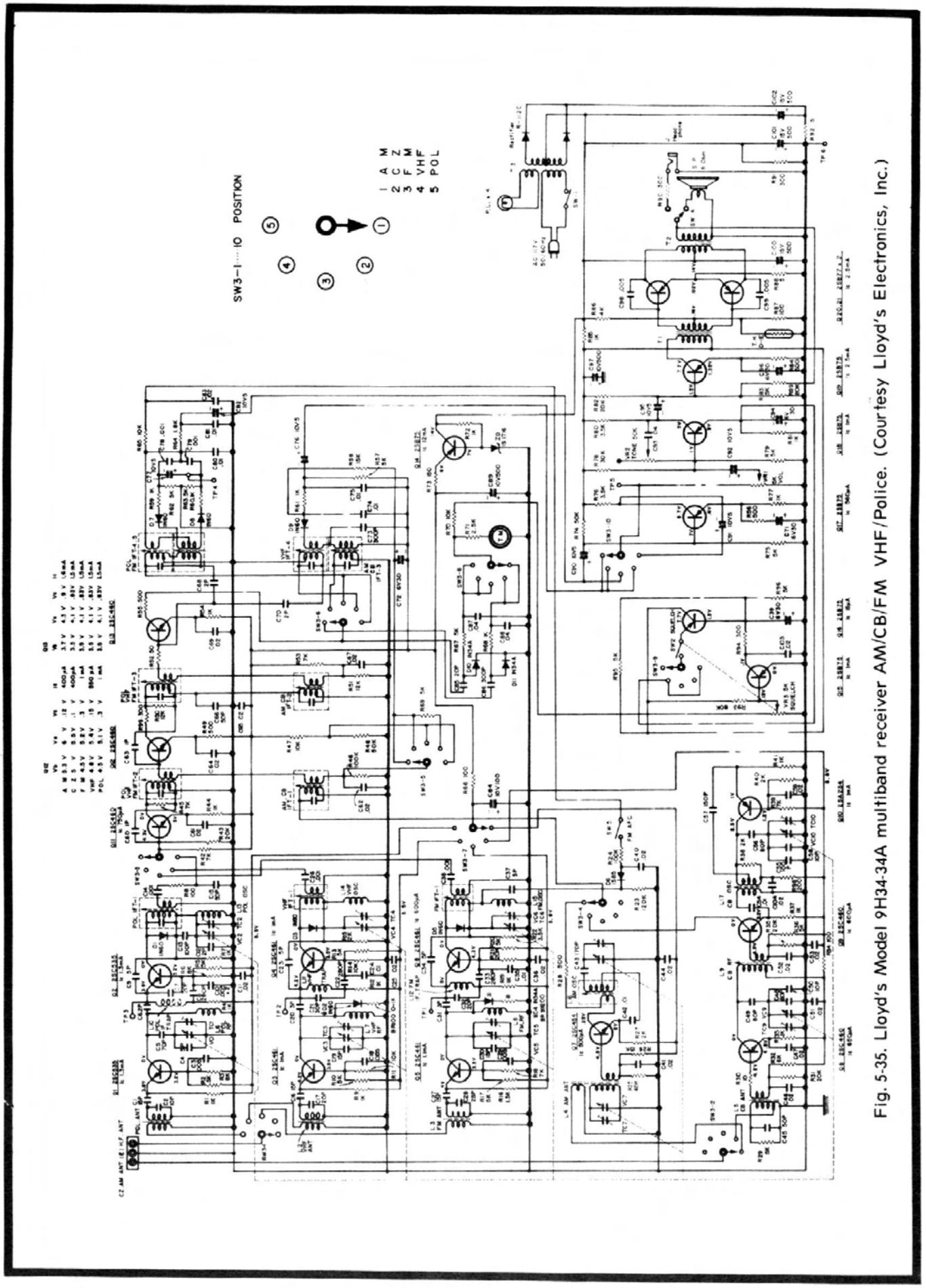

Fig. 5-35. Lloyd's Model 9H34-34A multiband receiver AM/CB/FM VHF/Police. (Courtesy Lloyd's Electronics, Inc.)

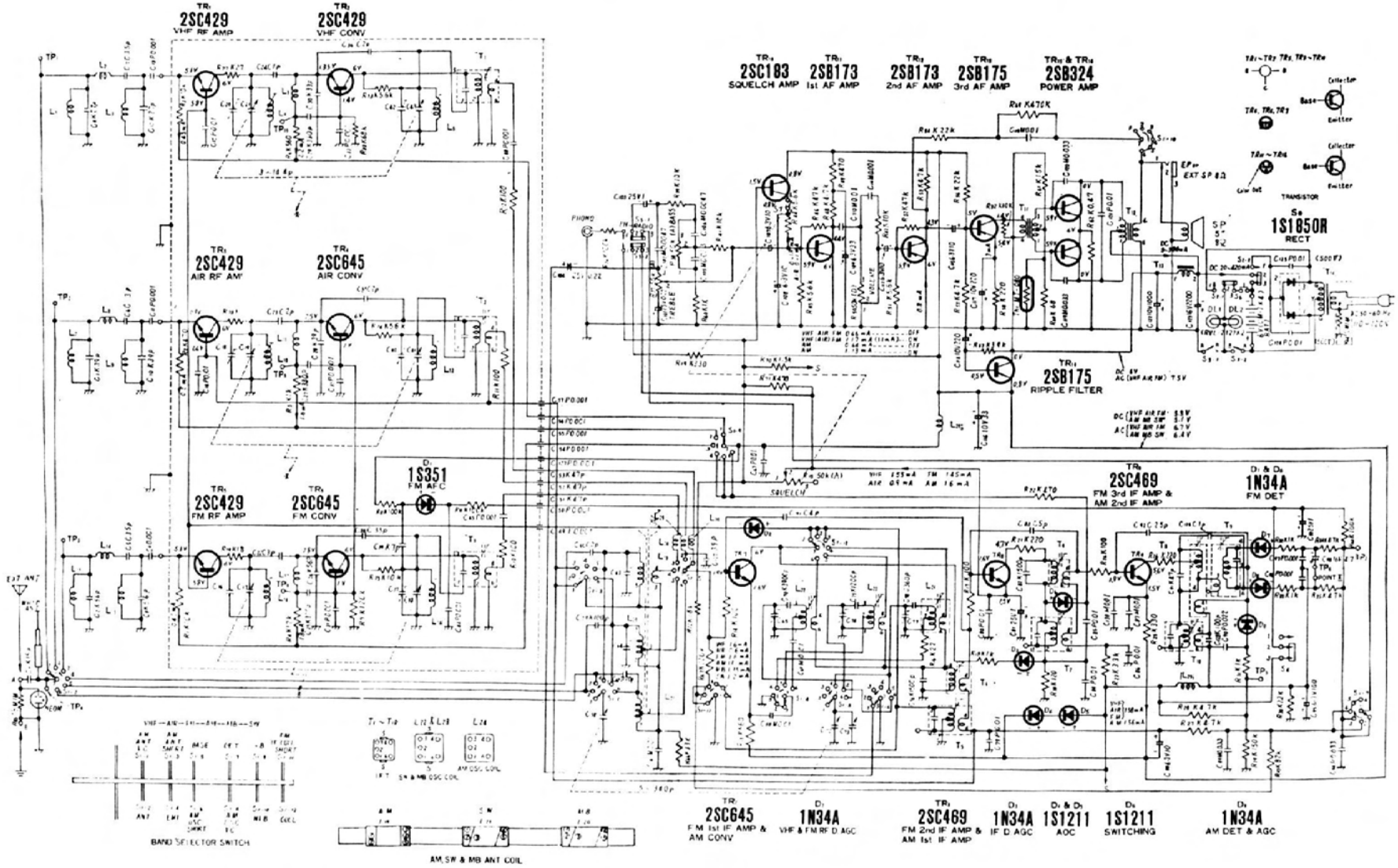

Notes:

1. S1-1~S1-12 : Band selector switch in "VHF" position.
2. S2-1, S2-2 : AC-Battery selector switch in "Battery" position.
3. S3-1, S3-2 : Power source switch in "OFF" position.
4. S4 : AFC switch in "ON" position.
5. S5-1, S5-2 : Phono-Radio selector switch in "RADIO" position.
6. S6 : Dial light switch in "OFF" position.
7. S7 : Squelch control in "OFF" position.
8. DC voltage measurements are taken with circuit tester 10KΩ/V from negative terminal of battery.
   TR1 & TR2.....VHF position TR5 & TR6.....FM position
   TR3 & TR4.....AIR position TR7~TR16.....AM position
9. Capital letters (J, K, M, P, C, D) in the circuit diagram show allowable tolerance of resistors and capacitors as follows:
   J=±5% K=±10% M=±20% P=+100% C=±0.25PF
   D=±0.5PF −0%
10. PF=pico farad=mmf μF=micro farad=mfd
11. Battery current: No signal FM & AM..... 22mA
    Maximum output FM & AM.....385mA
12. All resistor values in ohms (K=1000Ω).
13. All capacitor values in micro farad (P=mmf).

Fig. 5-36. Panasonic Model RF-1600 multiband portable receiver. (Courtesy Matsushita Electric Corp. of America)

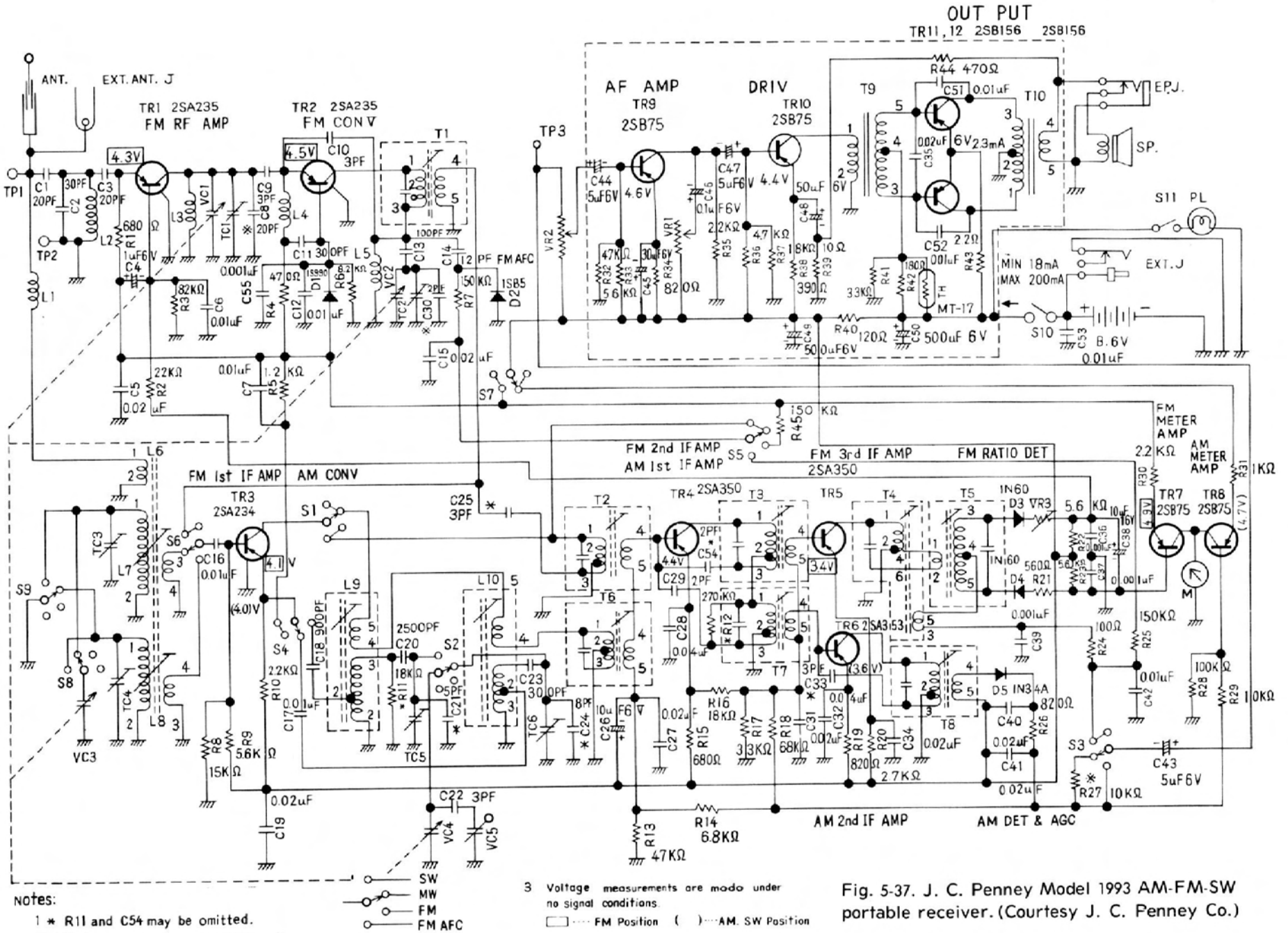

Fig. 5-37. J. C. Penney Model 1993 AM-FM-SW portable receiver. (Courtesy J. C. Penney Co.)

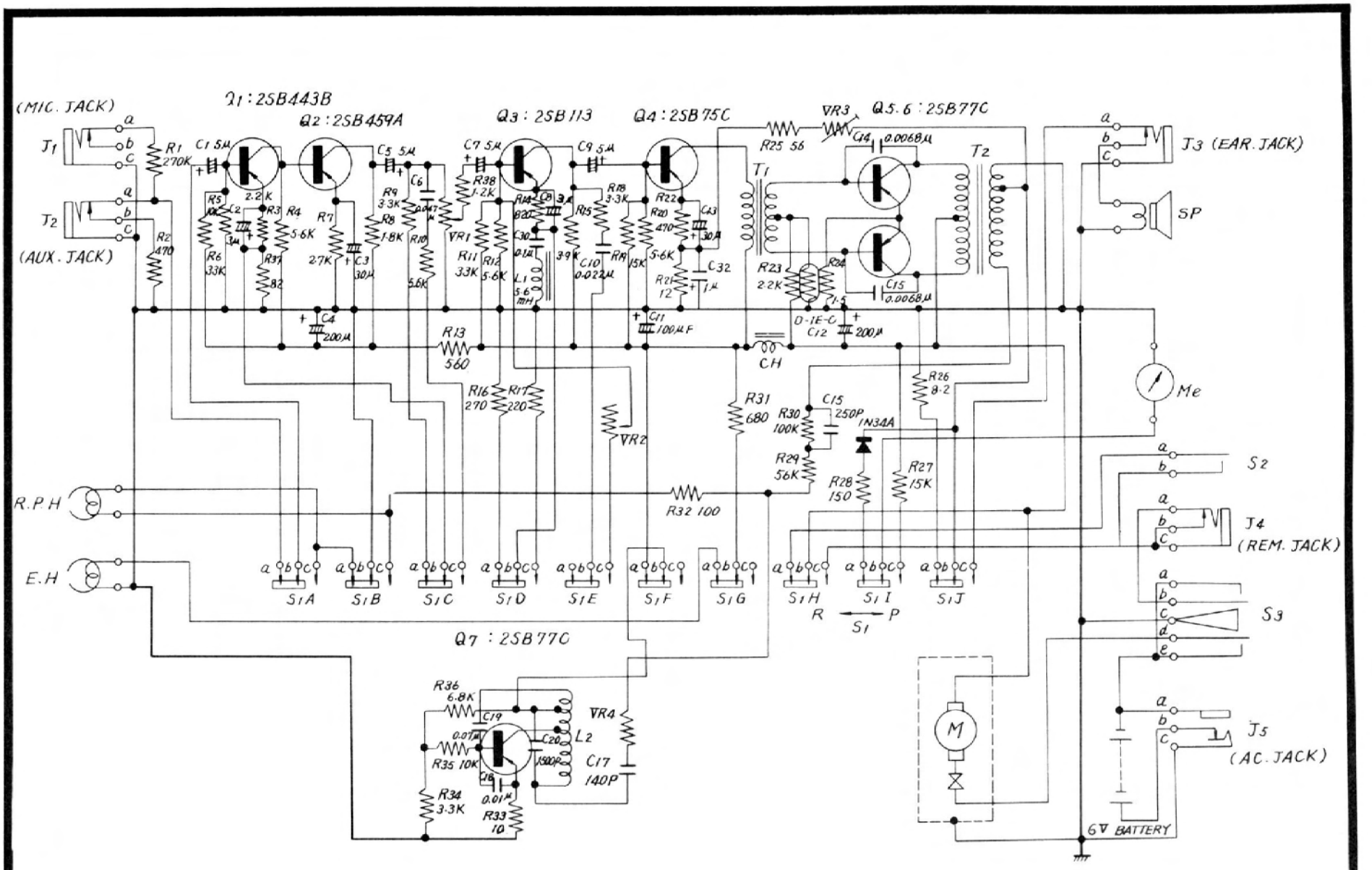

Fig. 5-38. Crown Model CTR-9000A tape recorder. (Courtesy Crown Radio Corp.)

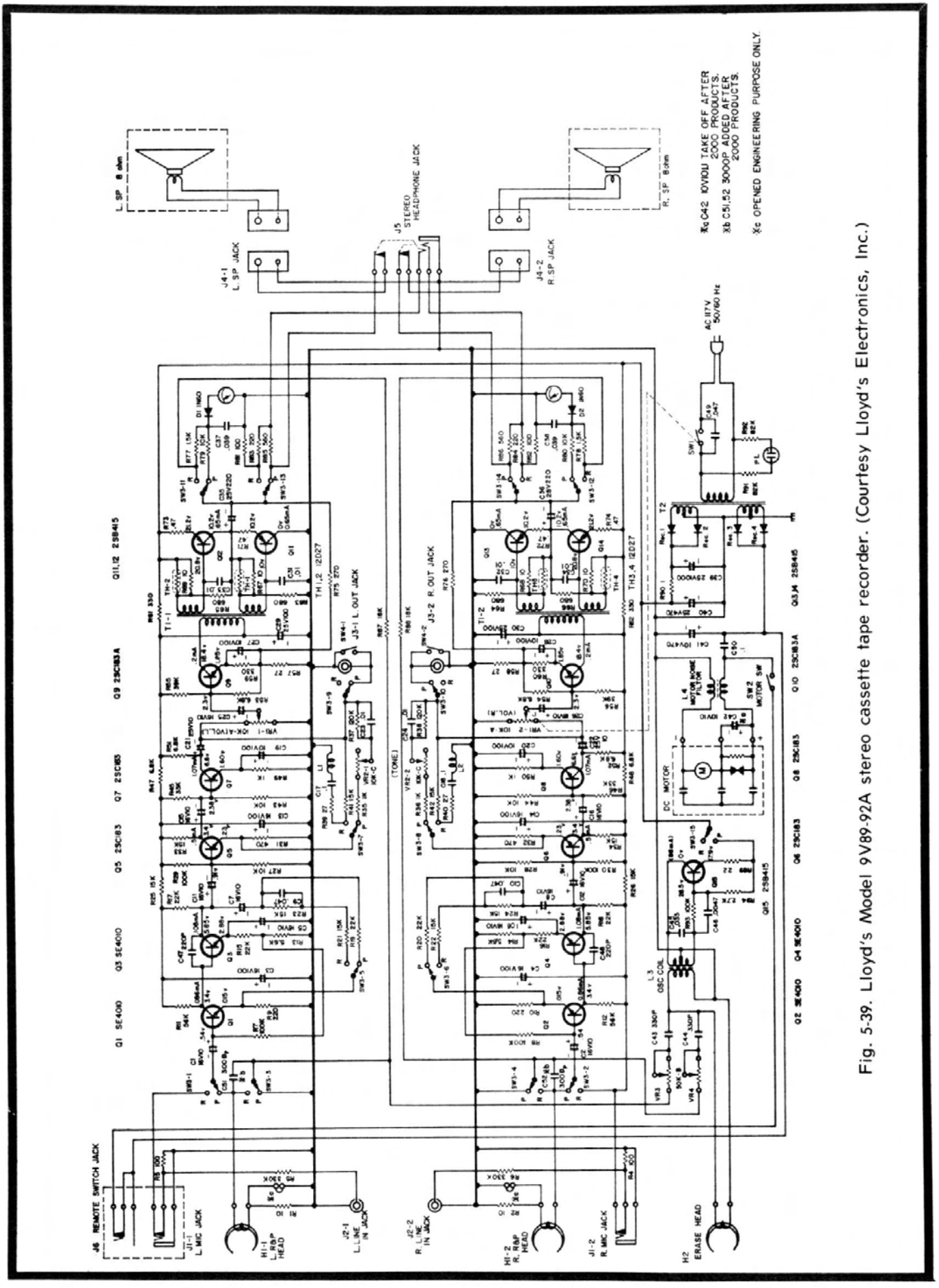

Fig. 5-39. Lloyd's Model 9V89-92A stereo cassette tape recorder. (Courtesy Lloyd's Electronics, Inc.)

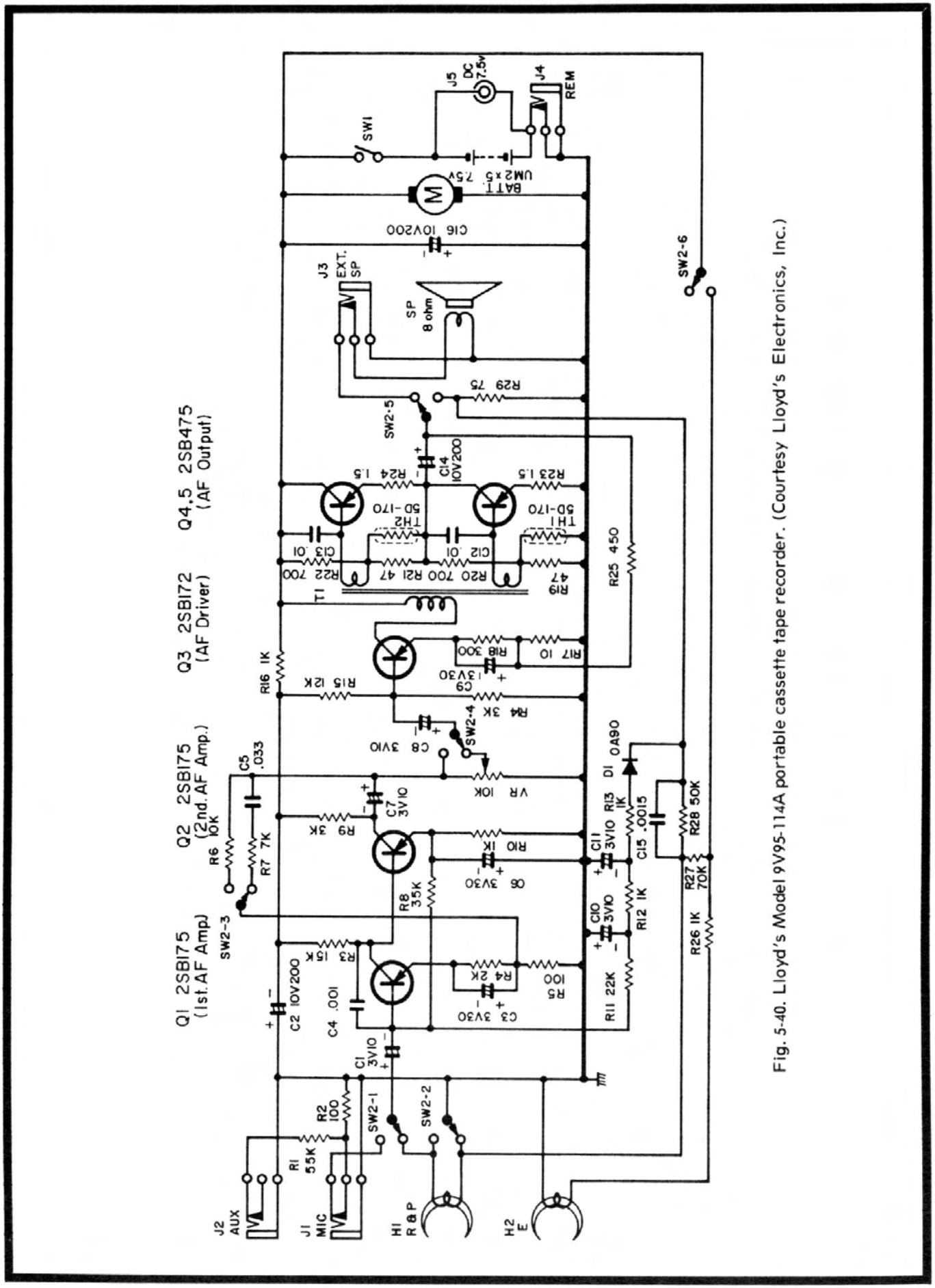

Fig. 5-40. Lloyd's Model 9V95-114A portable cassette tape recorder. (Courtesy Lloyd's Electronics, Inc.)

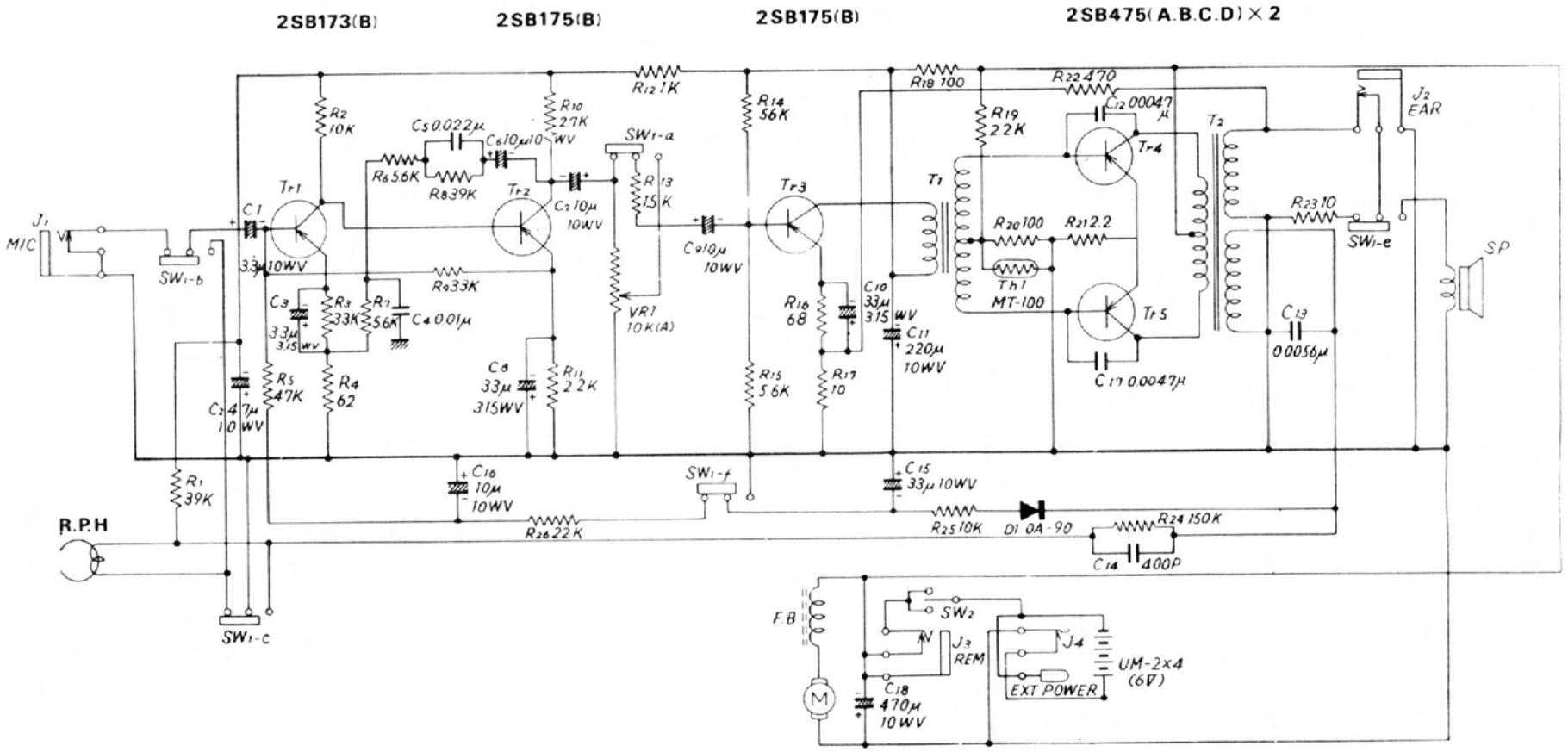

Fig. 5-41. Mercury Model 20-1002 tape recorder. (Courtesy Mercury Record Productions, Inc.)

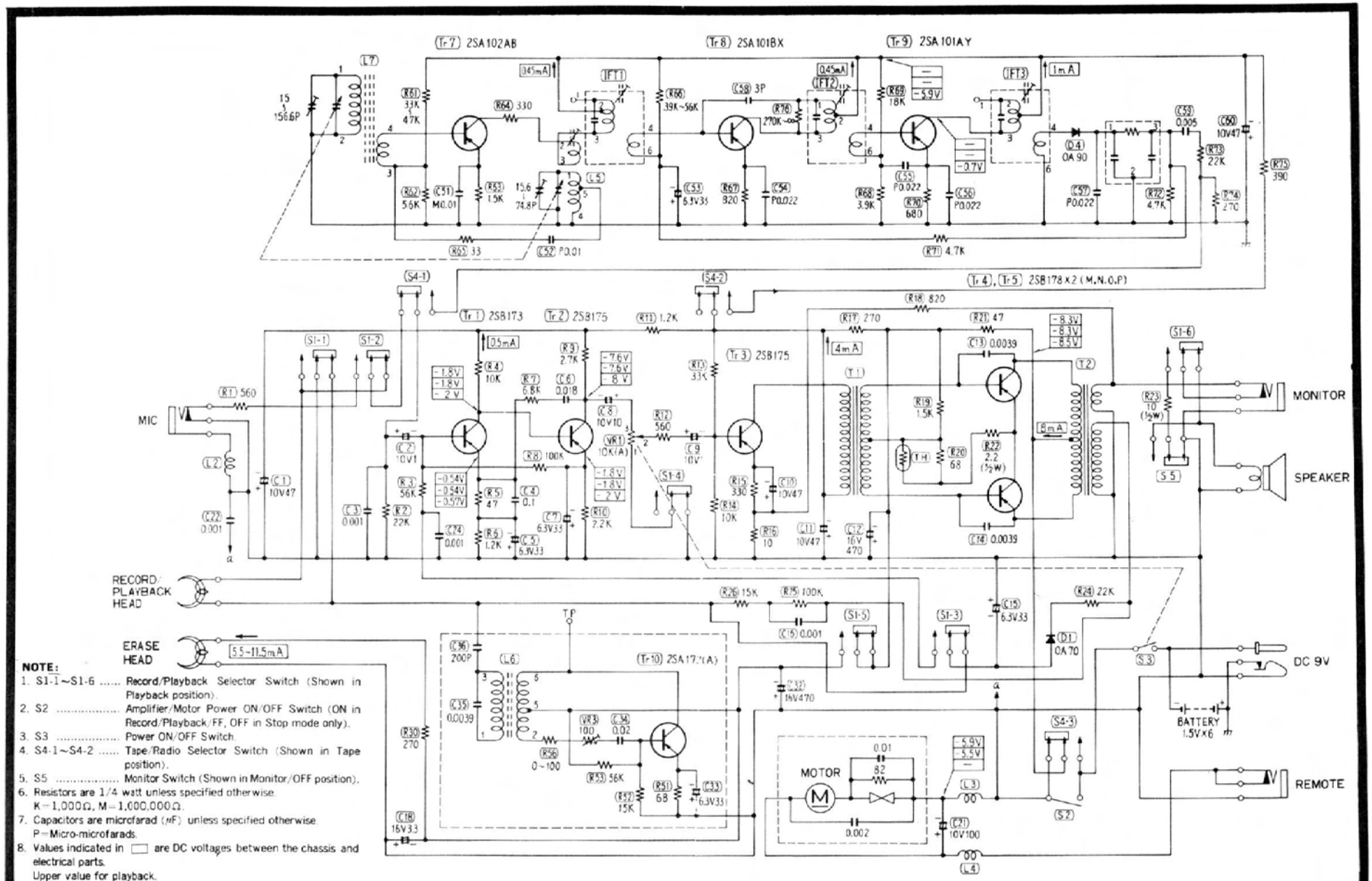

NOTE:

1. S1-1~S1-6 ..... Record/Playback Selector Switch (Shown in Playback position).
2. S2 ..... Amplifier/Motor Power ON/OFF Switch (ON in Record/Playback/FF, OFF in Stop mode only).
3. S3 ..... Power ON/OFF Switch.
4. S4-1~S4-2 ..... Tape/Radio Selector Switch (Shown in Tape position).
5. S5 ..... Monitor Switch (Shown in Monitor/OFF position).
6. Resistors are 1/4 watt unless specified otherwise.
   K=1,000Ω, M=1,000,000Ω.
7. Capacitors are microfarad (μF) unless specified otherwise.
   P=Micro-microfarads.
8. Values indicated in ☐ are DC voltages between the chassis and electrical parts.
   Upper value for playback.
   Medium value for recording.
   Lower value for radio.

Fig. 5-42. Panasonic Model RQ-233S cassette tape recorder with AM radio. (Courtesy Matsushita Electric Corp. of America)

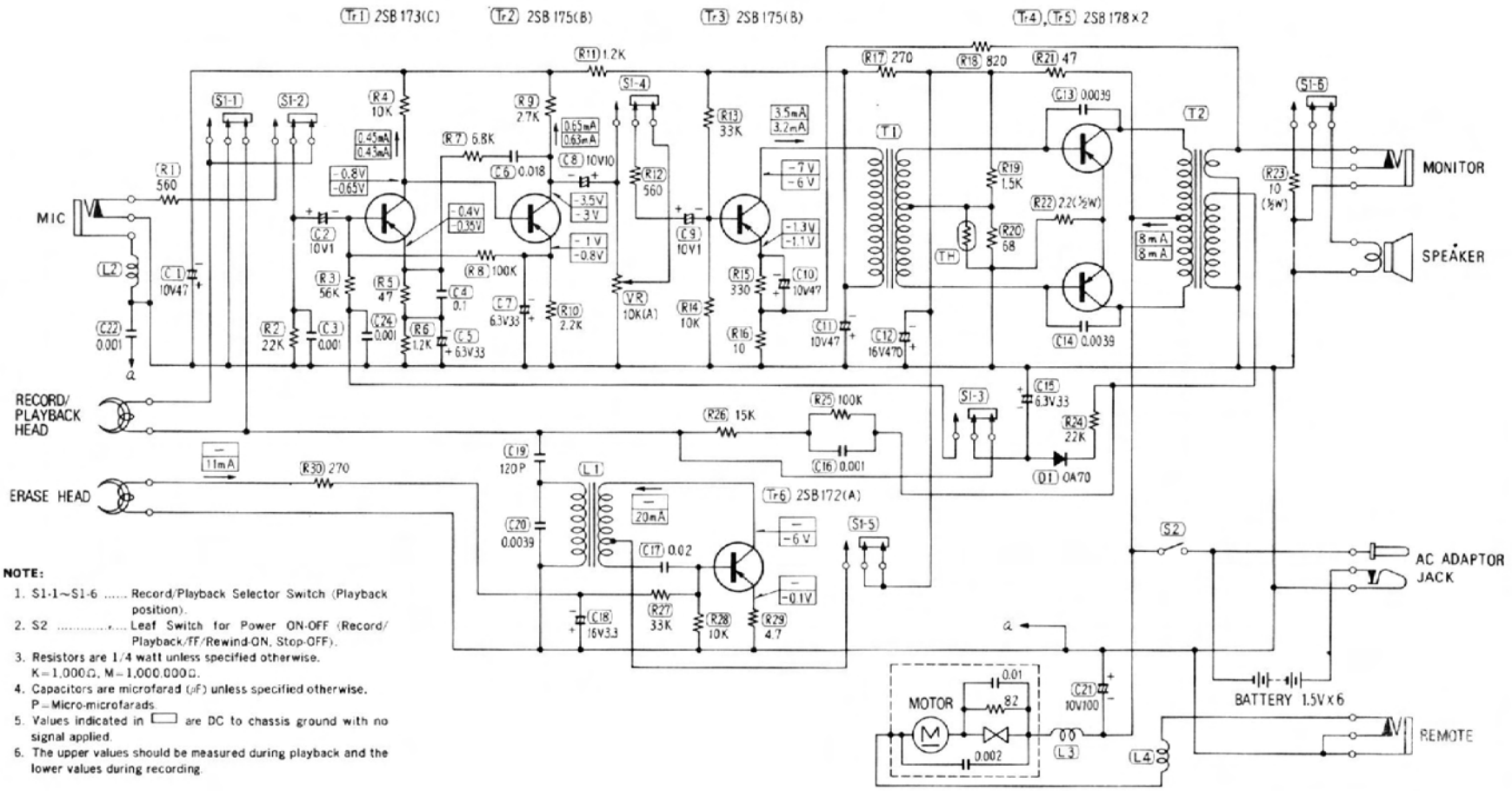

NOTE:

1. S1-1~S1-6 ..... Record/Playback Selector Switch (Playback position).
2. S2 ..... Leaf Switch for Power ON-OFF (Record/Playback/FF/Rewind-ON, Stop-OFF).
3. Resistors are 1/4 watt unless specified otherwise. K=1,000Ω, M=1,000,000Ω.
4. Capacitors are microfarad (μF) unless specified otherwise. P=Micro-microfarads.
5. Values indicated in □ are DC to chassis ground with no signal applied.
6. The upper values should be measured during playback and the lower values during recording.

Fig. 5-43. Panasonic Model RQ-204S portable cassette recorder. (Courtesy Matsushita Electric Corp. of America)

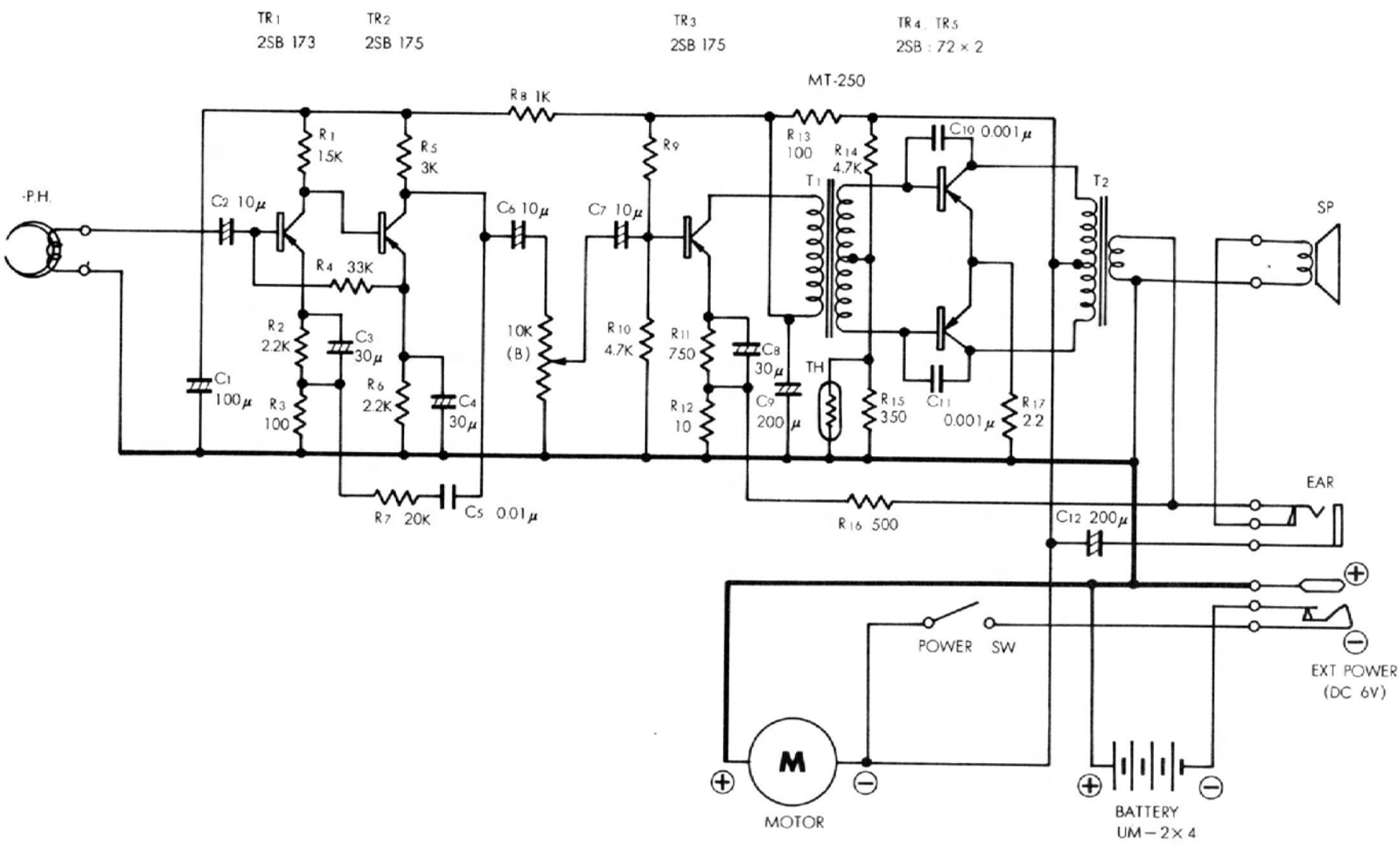

Fig. 5-44. Penncrest Model 3110 portable tape player. (Courtesy J. C. Penney Co.)

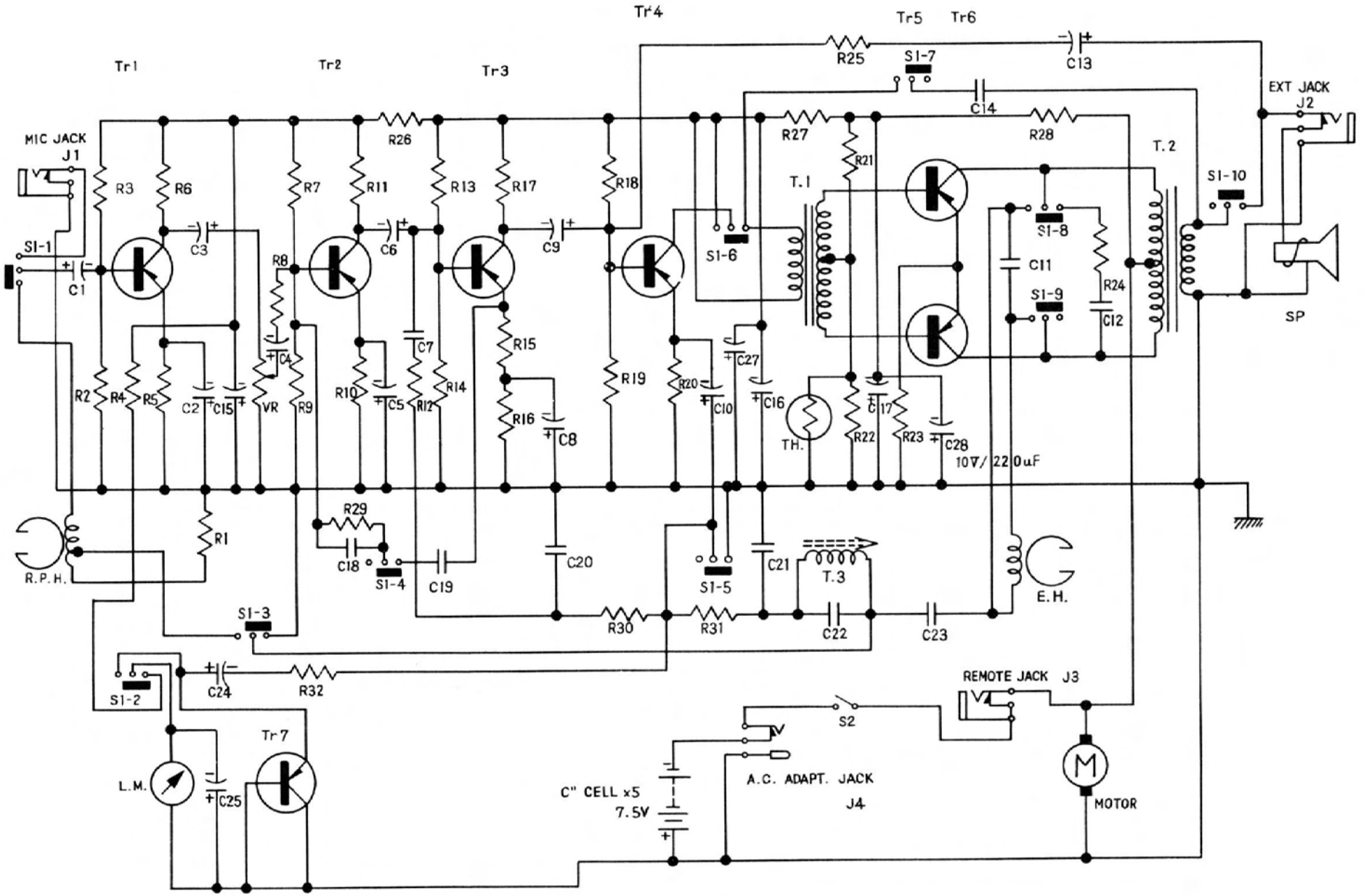

Fig. 5-45. Penncrest Model 6517 portable cassette tape player.(Courtesy J. C. Penney Co.)

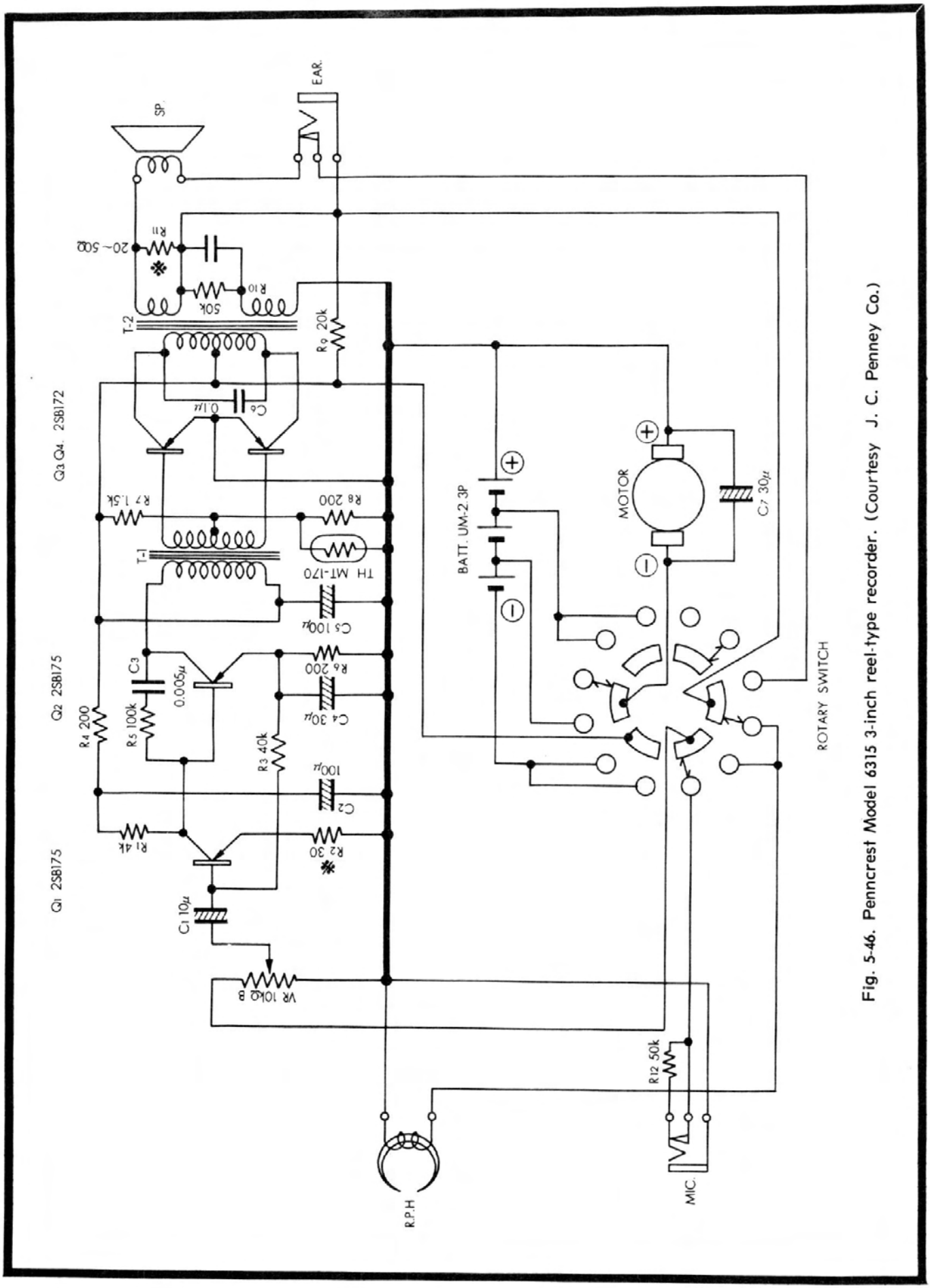

Fig. 5-46. Penncrest Model 6315 3-inch reel-type recorder. (Courtesy J. C. Penney Co.)

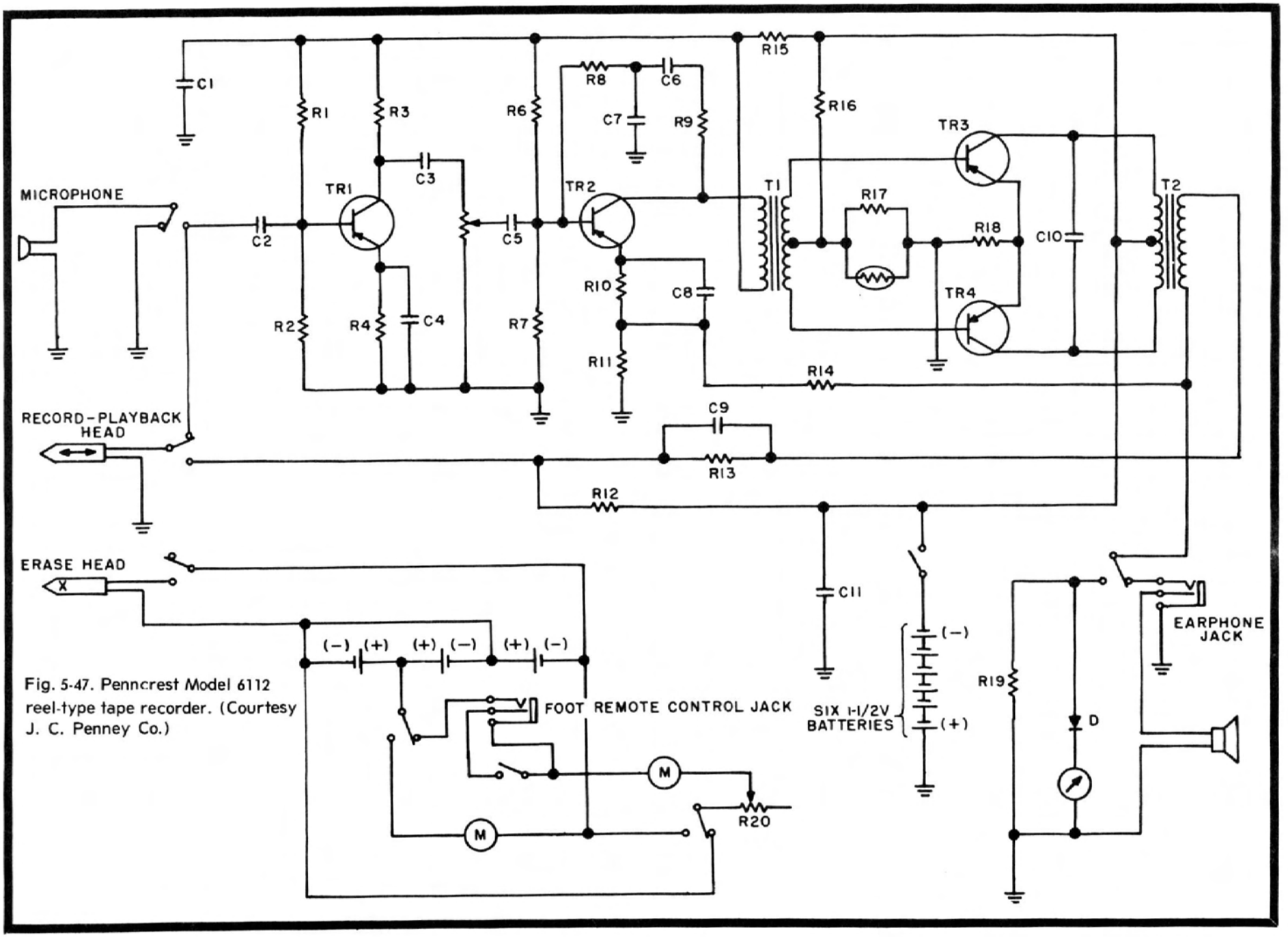

Fig. 5-47. Penncrest Model 6112 reel-type tape recorder. (Courtesy J. C. Penney Co.)

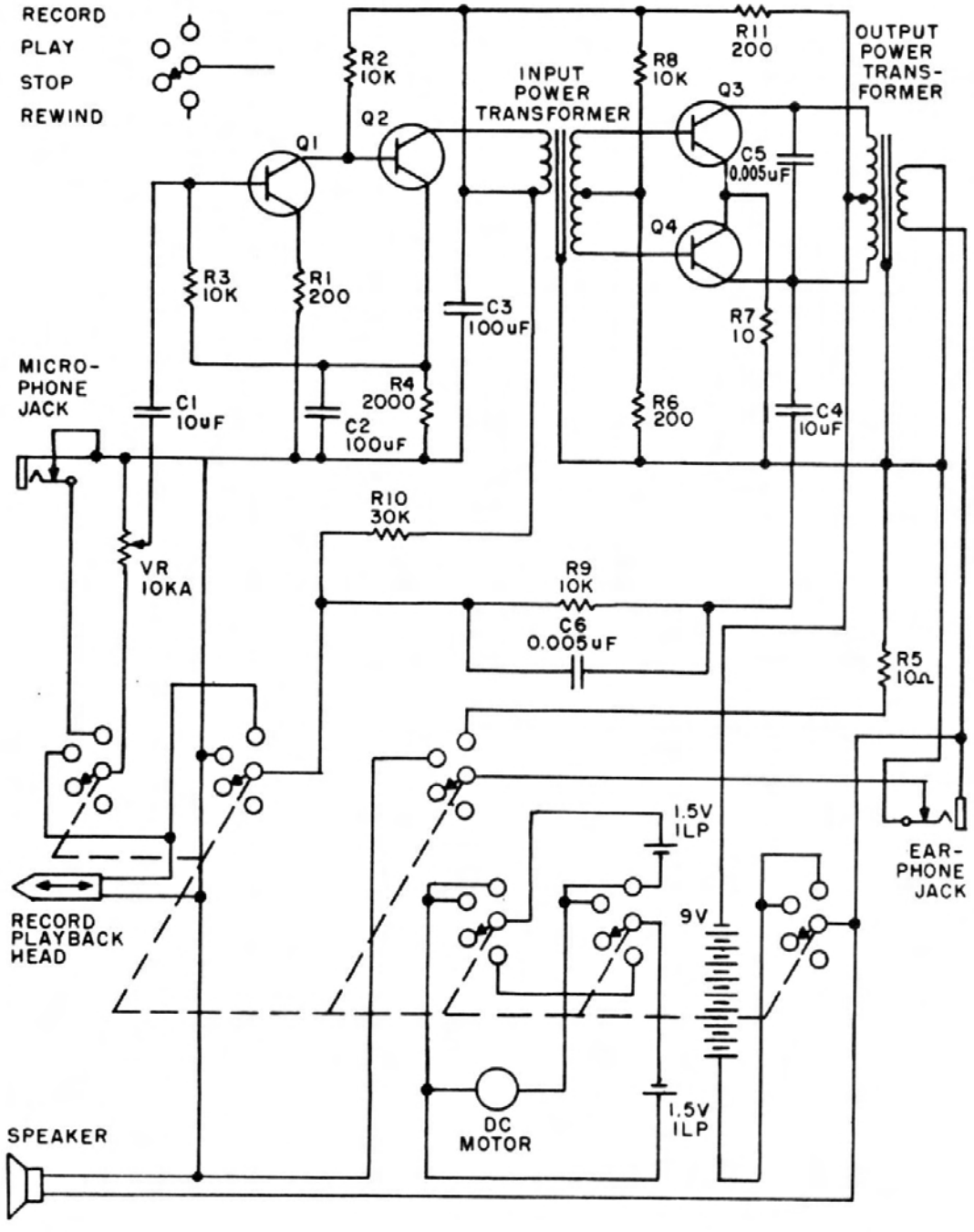

Fig. 5-48. Penncrest Model 6111-6111A reel-type tape recorder. (Courtesy J. C. Penney Co.)

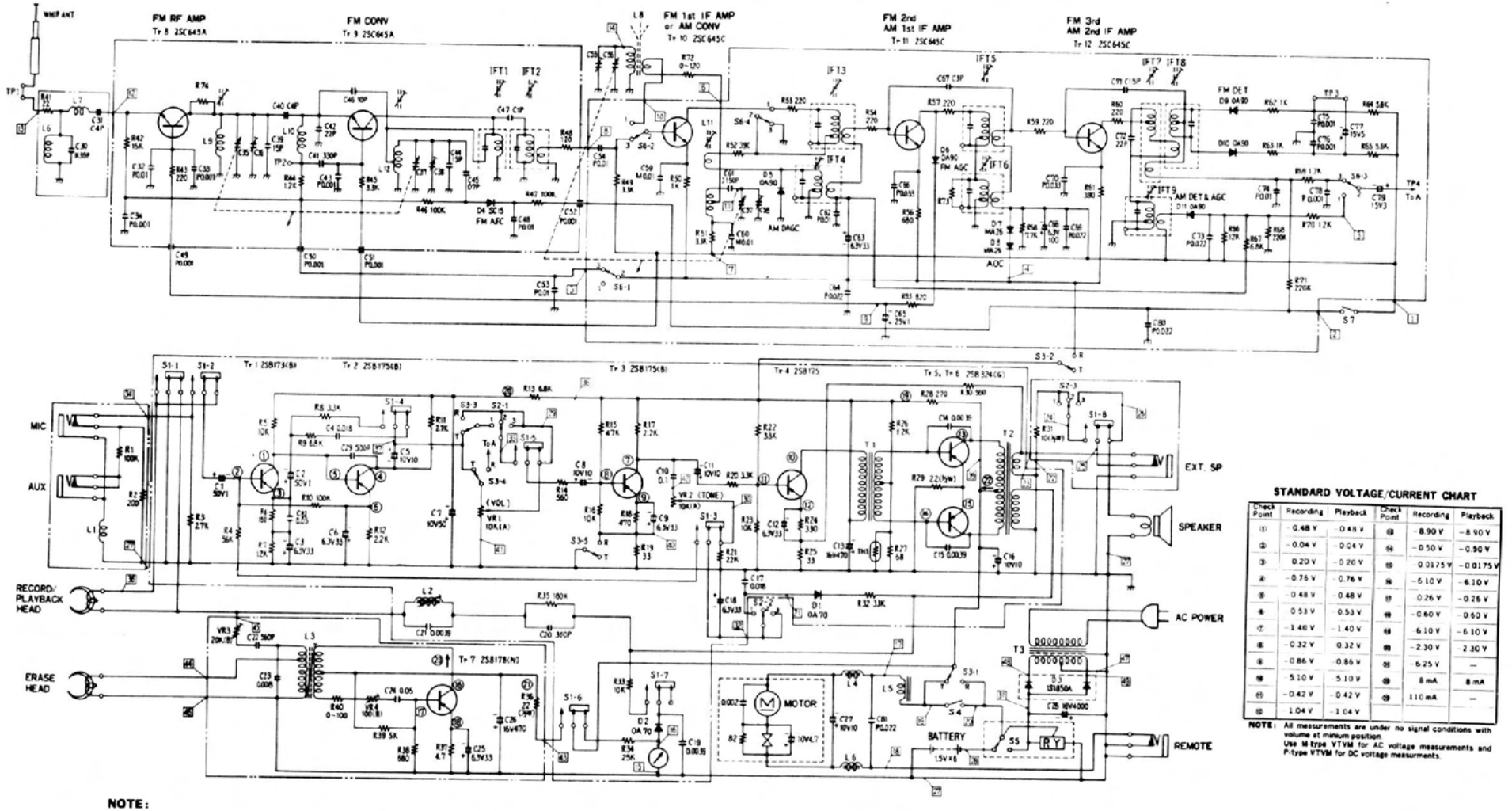

STANDARD VOLTAGE/CURRENT CHART

Check Point	Recording	Playback	Check Point	Recording	Playback
①	0.48 V	0.48 V	⑫	8.90 V	8.90 V
②	0.04 V	0.04 V	⑬	0.50 V	0.50 V
③	0.20 V	0.20 V	⑭	0.0175 V	0.0175 V
④	0.76 V	0.76 V	⑮	6.10 V	6.10 V
⑤	0.48 V	0.48 V	⑯	0.26 V	0.26 V
⑥	0.53 V	0.53 V	⑰	0.60 V	0.60 V
⑦	1.40 V	1.40 V	⑱	6.10 V	6.10 V
⑧	0.32 V	0.32 V	⑲	2.30 V	2.30 V
⑨	0.86 V	0.86 V	⑳	6.25 V	—
⑩	5.10 V	5.10 V	㉑	8 mA	8 mA
⑪	0.42 V	0.42 V	㉒	110 mA	—
⑫	1.04 V	1.04 V			

NOTE: All measurements are under no signal conditions with volume at minimum position.
Use M-type VTVM for AC voltage measurements and P-type VTVM for DC voltage measurments.

NOTE:

1. S1-1~S1-8..... Record/Playback Selector Switch (Shown in Playback).
2. S2-1~S2-3..... SP Monitor/OFF/ARC Selector Switch (Shown in SP Monitor/OFF).
3. S3-1~SS-5..... Tape/Radio Selector Switch (Shown in Tape).
4. S4 ..... Power Switch (Leaf Switch).
5. S5 ..... AC/DC Selector Switch (Relay).
6. S6-1~S6-4..... Band Selector Switch (Shown in FM).
7. S7 ..... AFC Switch (Shown in ON).
8. Resistors are 1/4 watt unless specified otherwise. K=1,000Ω, M=1,000,000Ω.
9. Capacitors are microfarad (μF) unless specified otherwise. P=Micro-microfarads.
10. Symbols put at the head of capacity values show deviations. P=−20~+80%, M=±20%, K=±10%, J=±5%, C=±0.25 pF, D=±0.5 pF.
11. Encircled numbers (◯) show the checkpoints for voltage and current. The values are marked in the Standard Voltage/current chart.
12. Numbers in □ show the same points as those marked in the Wiring Connection Diagram.

Fig. 5-49. Penncrest Model 3240 cassette tape recorder with AM-FM radio. (Courtesy J. C. Penney Co.)

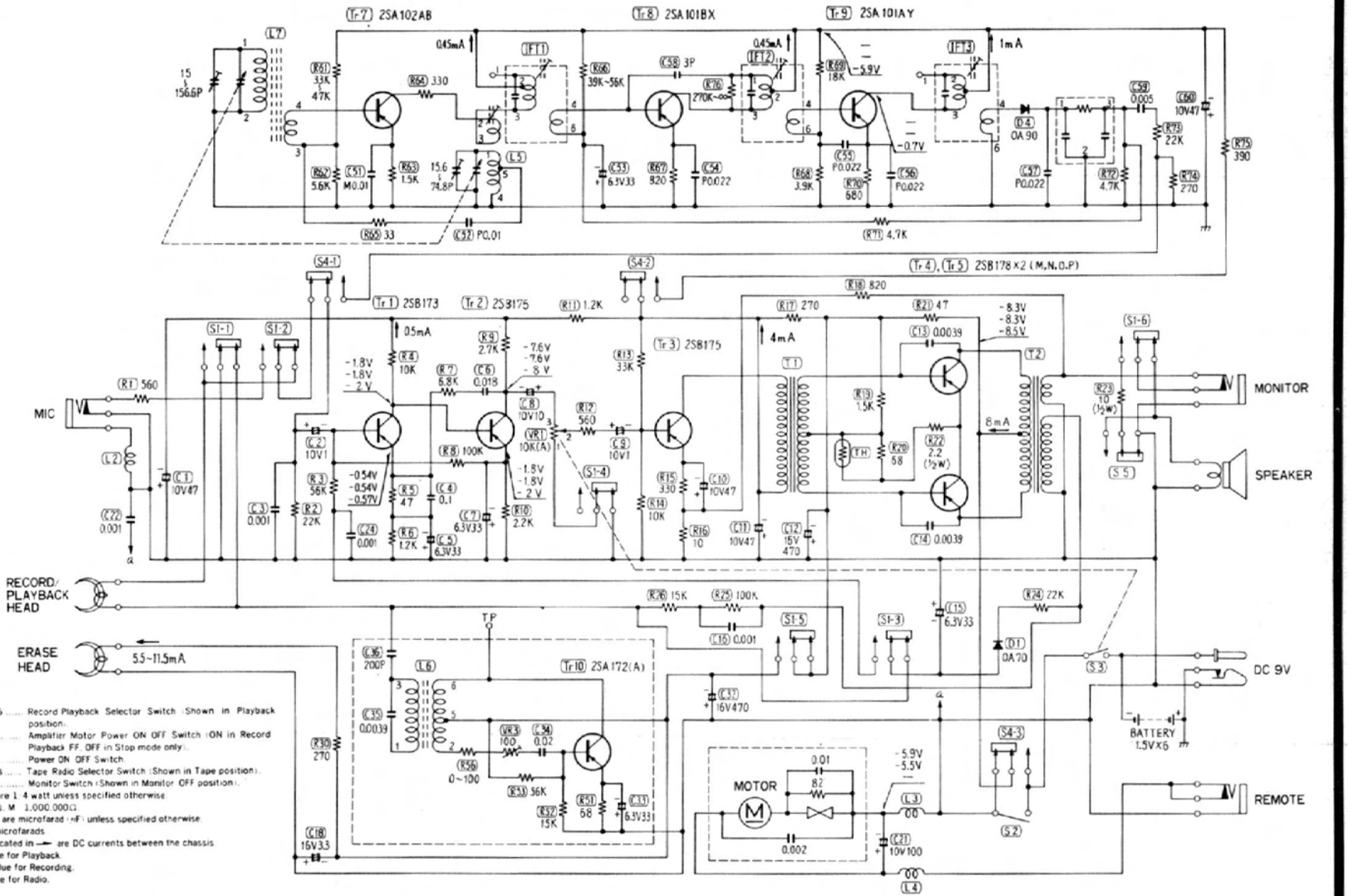

NOTE:

1. S1-1~S1-6 ..... Record Playback Selector Switch (Shown in Playback position).
2. S2 ..... Amplifier Motor Power ON OFF Switch (ON in Record Playback FF. OFF in Stop mode only).
3. S3 ..... Power ON OFF Switch.
4. S4-1~S4-3 ..... Tape Radio Selector Switch (Shown in Tape position).
5. S5 ..... Monitor Switch (Shown in Monitor OFF position).
6. Resistors are 1/4 watt unless specified otherwise.
   K 1,000Ω, M 1,000,000Ω.
7. Capacitors are microfarad (μF) unless specified otherwise.
   P Micro-microfarads.
8. Values indicated in ⟷ are DC currents between the chassis.
   Upper Value for Playback.
   Medium Value for Recording.
   Lower Value for Radio.

Fig. 5-50. Penncrest Model 3110 cassette tape recorder with AM radio(made by Matsushita Electric Corp. of America). (Courtesy J. C Penney Co.)

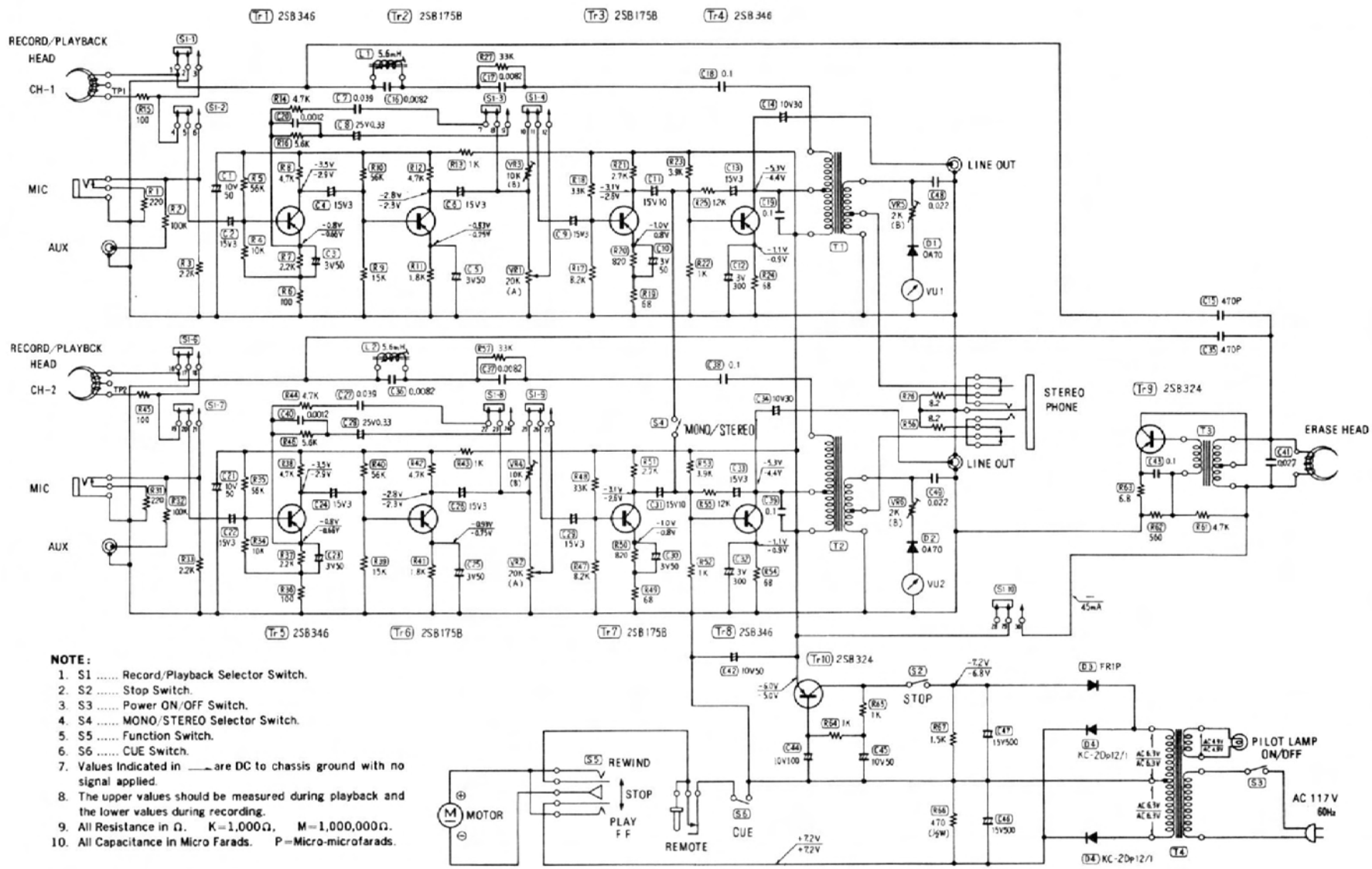

NOTE:

1. S1 ..... Record/Playback Selector Switch.
2. S2 ..... Stop Switch.
3. S3 ..... Power ON/OFF Switch.
4. S4 ..... MONO/STEREO Selector Switch.
5. S5 ..... Function Switch.
6. S6 ..... CUE Switch.
7. Values Indicated in ___ are DC to chassis ground with no signal applied.
8. The upper values should be measured during playback and the lower values during recording.
9. All Resistance in Ω. K=1,000Ω, M=1,000,000Ω.
10. All Capacitance in Micro Farads. P=Micro-microfarads.

Fig. 5-51. Penncrest Model 6521 cartridge stereo tape recorder (made by Matsushita Electric Corp. of America). (Courtesy J. C Penney Co.)

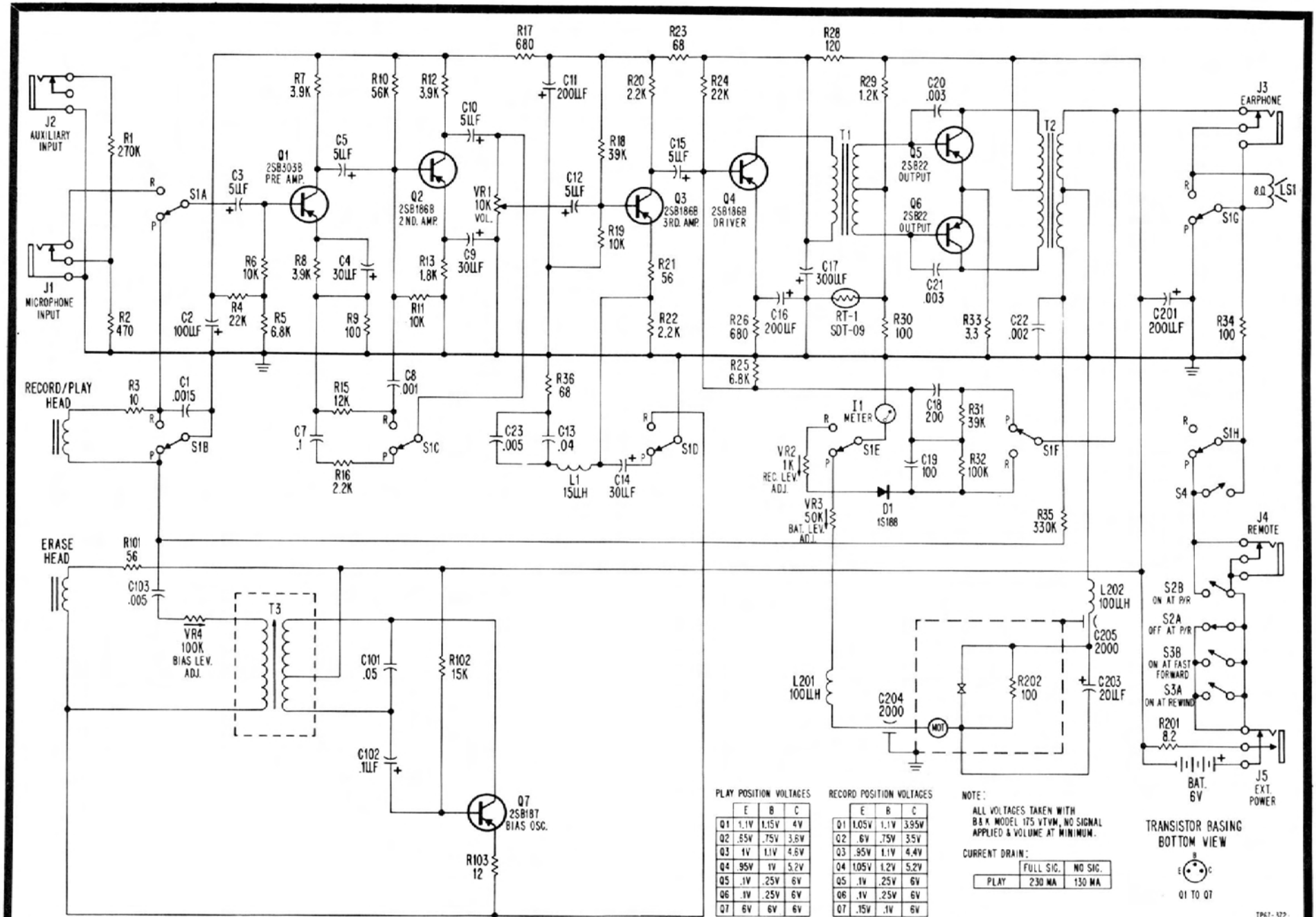

PLAY POSITION VOLTAGES	E	B	C
Q1	1.1V	1.15V	4V
Q2	.55V	.75V	3.6V
Q3	1V	1.1V	4.6V
Q4	.95V	1V	5.2V
Q5	.1V	.25V	6V
Q6	.1V	.25V	6V
Q7	6V	6V	6V

RECORD POSITION VOLTAGES	E	B	C
Q1	1.05V	1.1V	3.95V
Q2	.6V	.75V	3.5V
Q3	.95V	1.1V	4.4V
Q4	1.05V	1.2V	5.2V
Q5	.1V	.25V	6V
Q6	.1V	.25V	6V
Q7	.15V	.1V	6V

CURRENT DRAIN:	FULL SIG.	NO SIG.
PLAY	230 MA	130 MA

Fig. 5-52. Philco-Ford Model TRC-20 tape recorder. (Courtesy Philco-Ford Corp.)

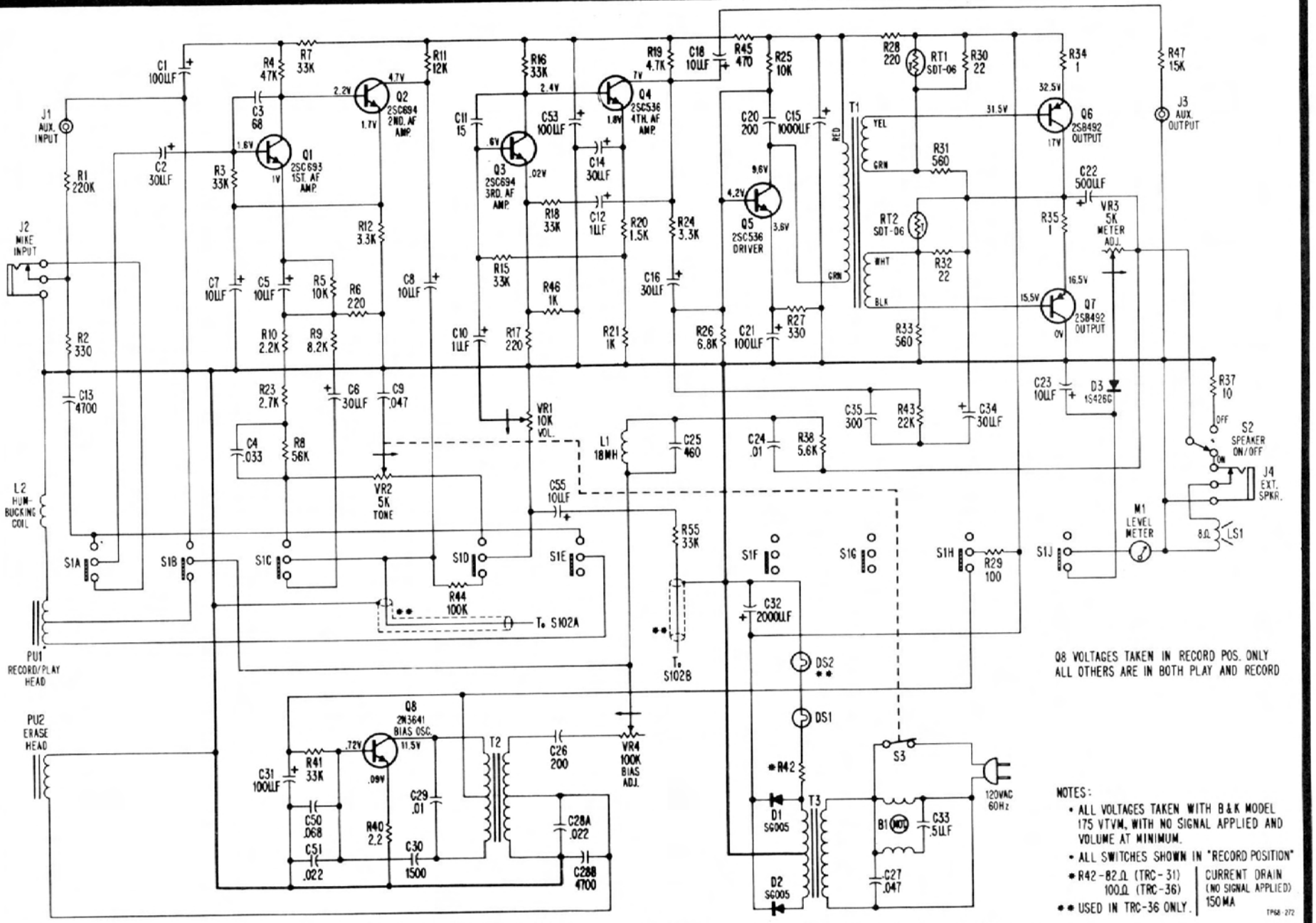

Fig. 5-53. Philco-Ford Model TRC-31, TRC-36 tape recorder. (Courtesy Philco-Ford Corp.)

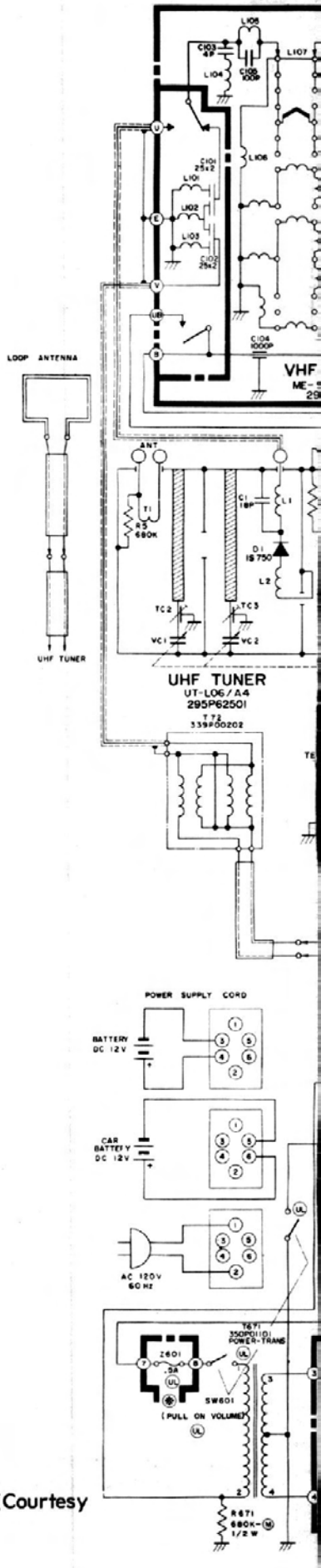

Panel B. Midland Model 15-009 AC-DC portable TV. (Courtesy Midland International Corp.)

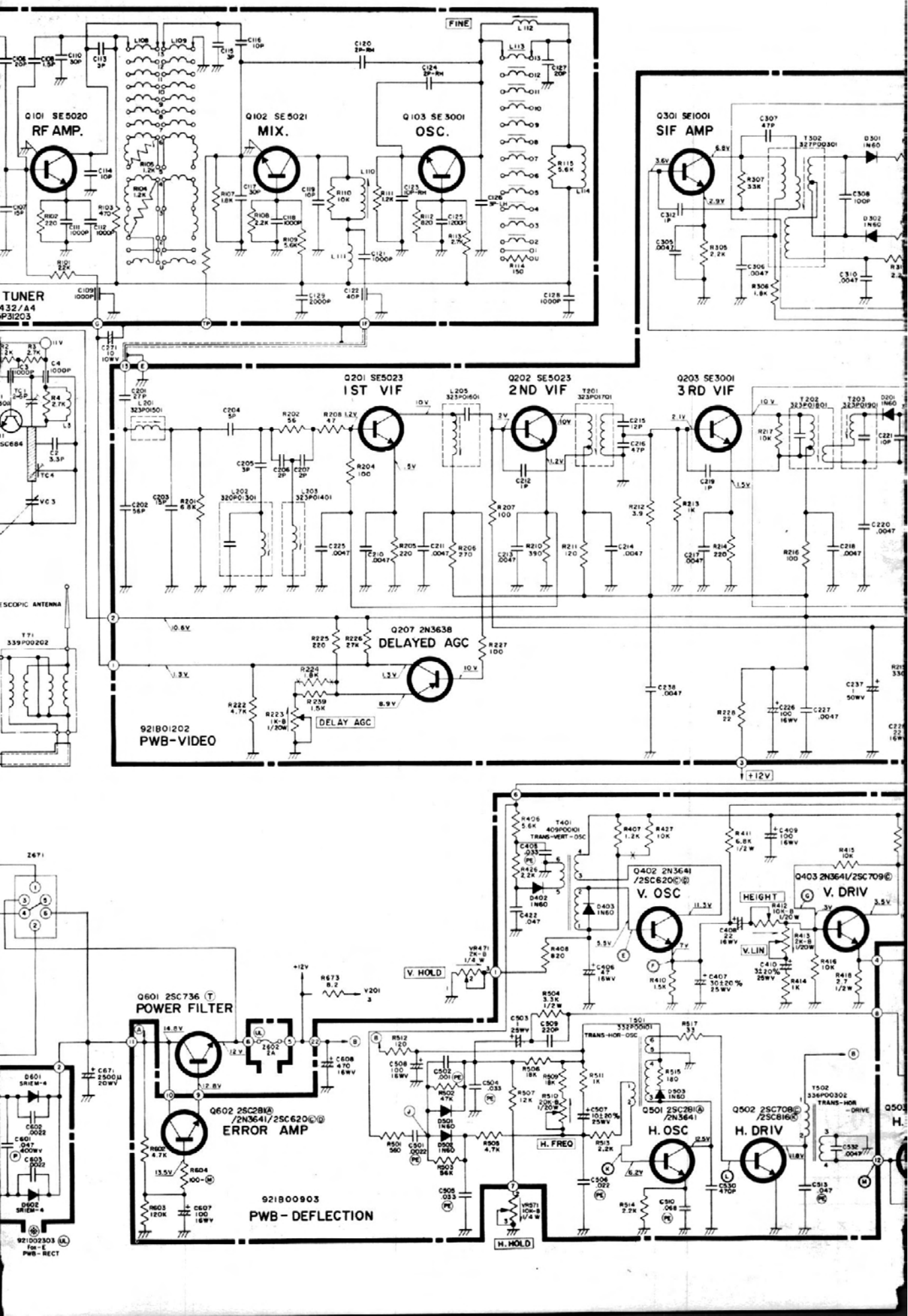
Q101 SE5020
RF AMP.
Q102 SE5021
MIX.
Q103 SE3001
OSC.
FINE
TUNER
Q301 SE1001
SIF AMP
Q201 SE5023
1ST VIF
Q202 SE5023
2ND VIF
Q203 SE3001
3RD VIF
Q207 2N3638
DELAYED AGC
DELAY AGC
921801202
PWB-VIDEO
+12V
Q601 2SC736
POWER FILTER
Q602 2SC281
/2N3641/2SC620
ERROR AMP
921800903
PWB - DEFLECTION
V. HOLD
Q402 2N3641
/2SC620
V. OSC
Q403 2N3641/2SC709
V. DRIV
HEIGHT
V. LIN
H. FREQ
H. HOLD
Q501 2SC281
/2N3641
H. OSC
Q502 2SC708
/2SC816
H. DRIV

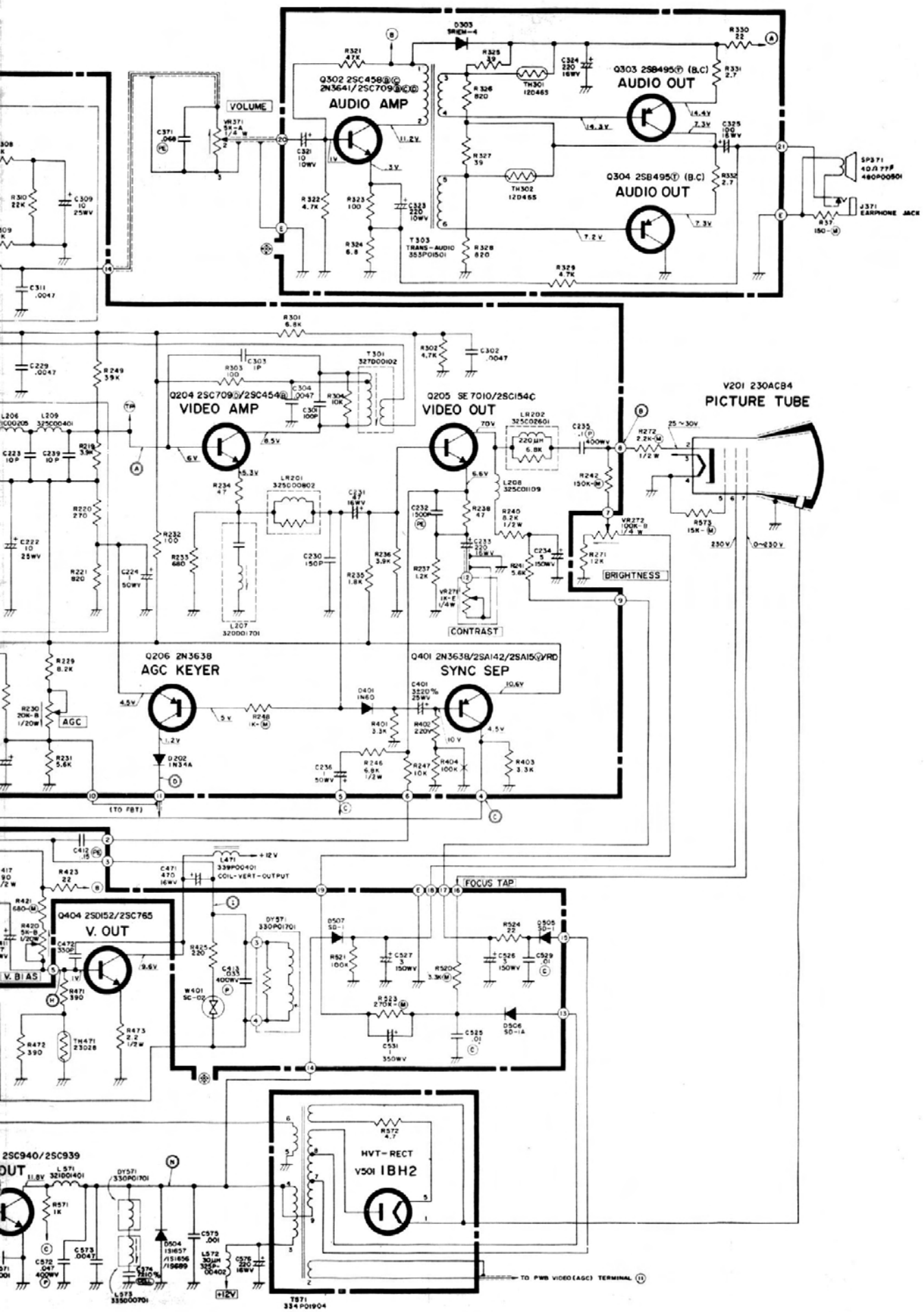
VOLUME
Q302 2SC458 2N3641/2SC709
AUDIO AMP
Q303 2SB495 (B,C)
AUDIO OUT
Q304 2SB495 (B,C)
AUDIO OUT
SP371
J371 EARPHONE JACK
Q204 2SC709/2SC454
VIDEO AMP
Q205 SE7010/2SC154C
VIDEO OUT
V201 230ACB4
PICTURE TUBE
BRIGHTNESS
CONTRAST
Q206 2N3638
AGC KEYER
Q401 2N3638/2SA142/2SA15
SYNC SEP
AGC
(TO FBT)
Q404 2SD152/2SC765
V. OUT
V. BIAS
FOCUS TAP
HVT-RECT
V501 1BH2
TO PWB VIDEO(AGC) TERMINAL

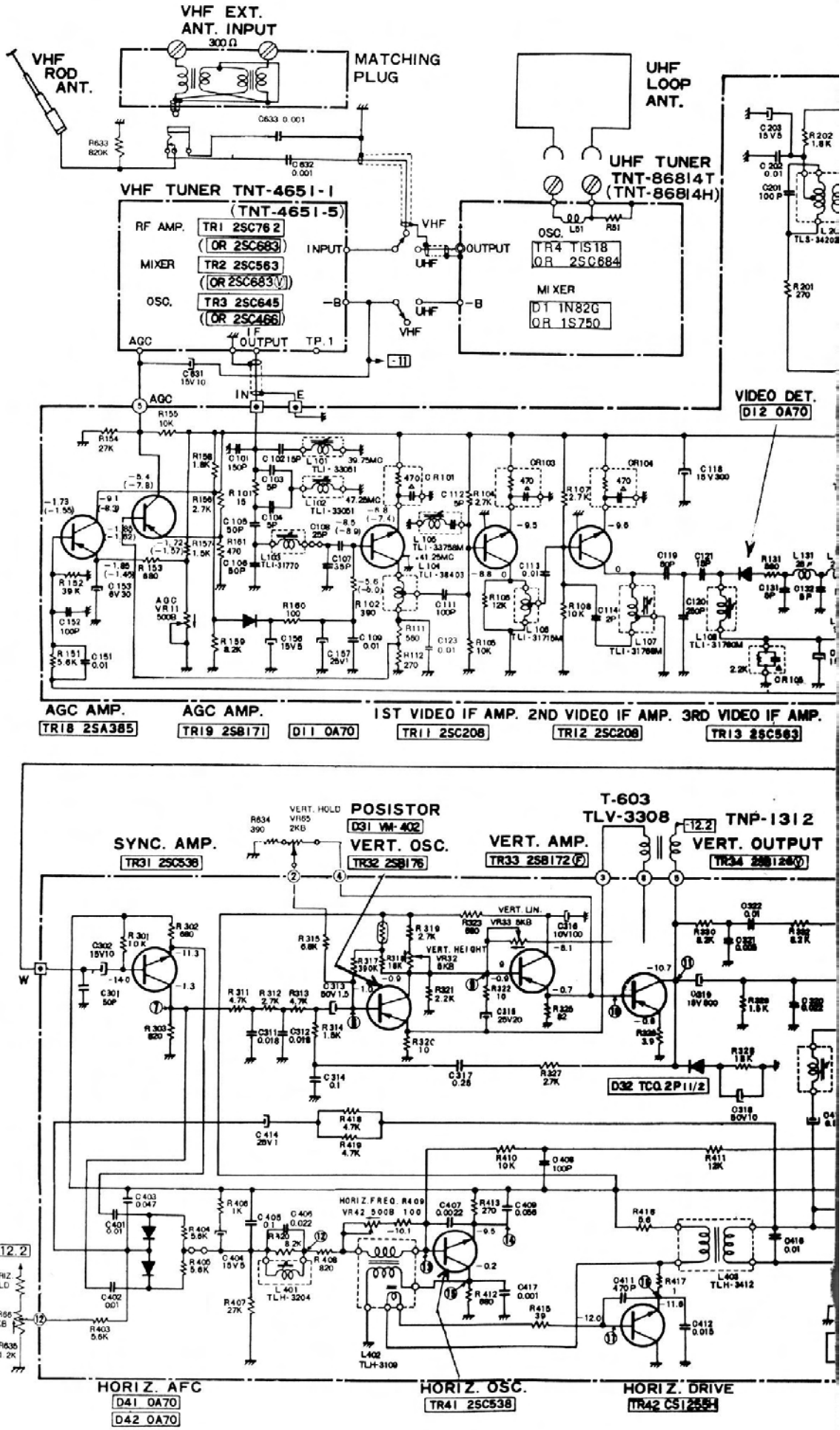
VHF EXT. ANT. INPUT
300Ω
VHF ROD ANT.
MATCHING PLUG
UHF LOOP ANT.
UHF TUNER TNT-8681 4T (TNT-8681 4H)
VHF TUNER TNT-4651-1 (TNT-4651-5)
RF AMP. TR1 2SC762 (OR 2SC683)
MIXER TR2 2SC563 (OR 2SC683V)
OSC. TR3 2SC645 (OR 2SC466)
INPUT
OUTPUT
VHF
UHF
OSC. TR4 TIS18 OR 2SC684
MIXER D1 1N82G OR 1S750
AGC
IF OUTPUT
TP.1
VIDEO DET. D12 0A70
AGC AMP. TR18 2SA385
AGC AMP. TR19 2SB171
D11 0A70
1ST VIDEO IF AMP. TR11 2SC208
2ND VIDEO IF AMP. TR12 2SC208
3RD VIDEO IF AMP. TR13 2SC563
T-603 TLV-3308
TNP-1312
SYNC. AMP. TR31 2SC536
VERT. OSC. TR32 2SB176
VERT. AMP. TR33 2SB172
VERT. OUTPUT TR34 2SB1240
POSISTOR D31 VM-402
VERT. HOLD VR65 2KB
VERT. LIN. VR33 5KB
VERT. HEIGHT VR32 5KB
D32 TC0.2P11/2
HORIZ. HOLD VR66 1KB
HORIZ. FREQ. R409 VR42 500B
HORIZ. AFC D41 0A70 D42 0A70
HORIZ. OSC. TR41 2SC538
HORIZ. DRIVE TR42 2SC2554

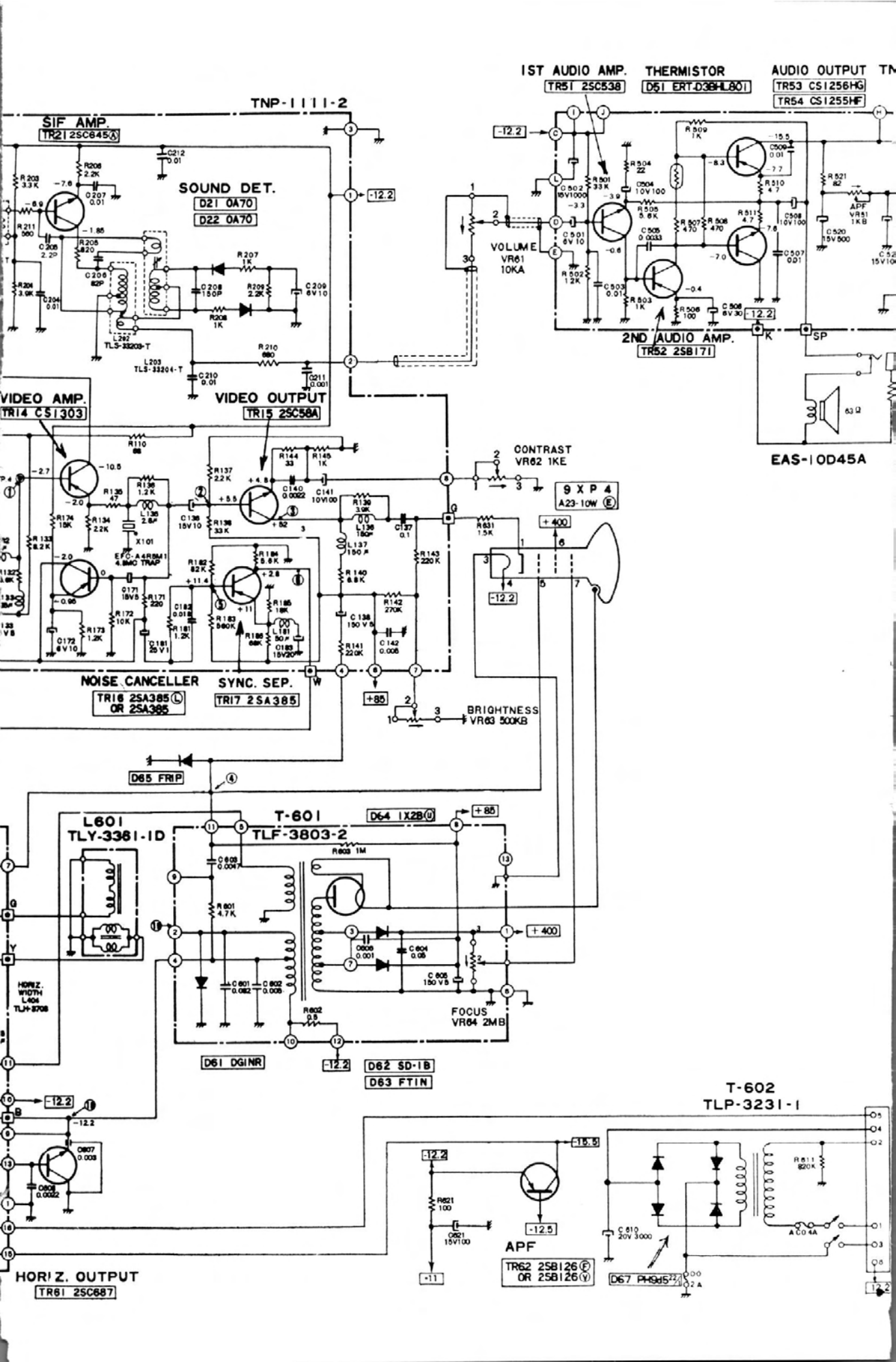
TNP-1111-2
SIF AMP.
TR212SC645A
SOUND DET.
D21 0A70
D22 0A70
VOLUME
VR61
10KA
1ST AUDIO AMP.
TR51 2SC538
THERMISTOR
D51 ERT-D3SHL801
AUDIO OUTPUT
TR53 CS1256HG
TR54 CS1255HF
2ND AUDIO AMP.
TR52 2SB171
EAS-10D45A
VIDEO AMP.
TRI4 CS1303
VIDEO OUTPUT
TRI5 2SC58A
CONTRAST
VR62 1KE
9XP4
A23-10W
NOISE CANCELLER
TRI6 2SA385L
OR 2SA385
SYNC. SEP.
TRI7 2SA385
BRIGHTNESS
VR63 500KB
D65 FRIP
L601
TLY-3361-1D
T-601
TLF-3803-2
D64 1X28U
FOCUS
VR64 2MB
D61 DGINR
D62 SD-1B
D63 FTIN
HORIZ.
WIDTH
L404
TLH-3708
T-602
TLP-3231-1
APF
TR62 2SB126F
OR 2SB126Y
HORIZ. OUTPUT
TR61 2SC687
D67 PH9d5
-12.2
+85
+400
-15.5
-12.5
+11
63Ω



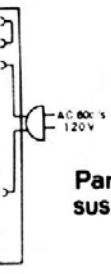

Panel A. Penncrest Model 1314B-89 portable TV (made by Matsushita Corp. of America. (Courtesy J. C. Penney Co.)

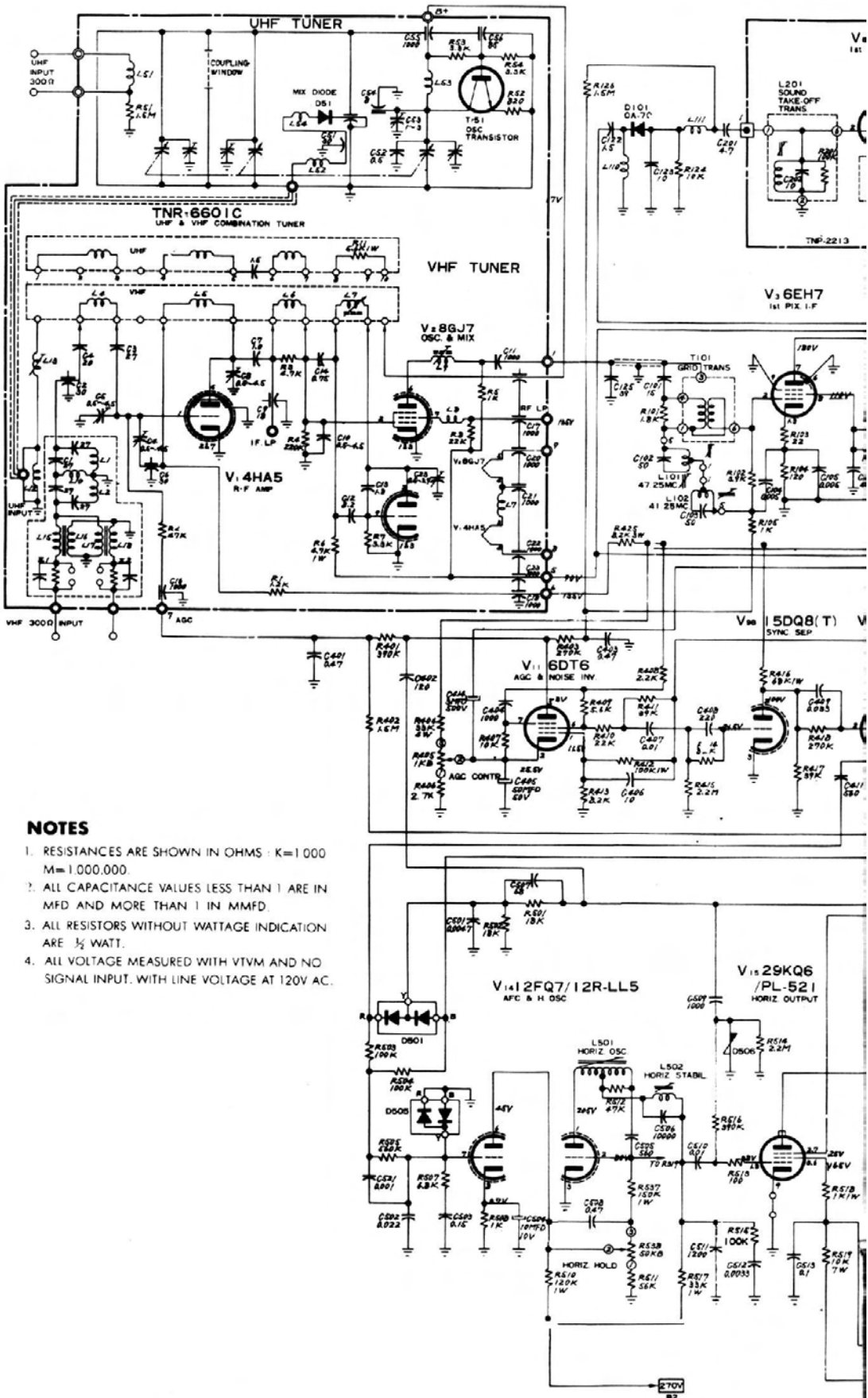

NOTES

1. RESISTANCES ARE SHOWN IN OHMS : K=1 000 M=1.000.000.
2. ALL CAPACITANCE VALUES LESS THAN 1 ARE IN MFD AND MORE THAN 1 IN MMFD.
3. ALL RESISTORS WITHOUT WATTAGE INDICATION ARE ½ WATT.
4. ALL VOLTAGE MEASURED WITH VTVM AND NO SIGNAL INPUT. WITH LINE VOLTAGE AT 120V AC.

Panel K. Penncrest Model 2893 color TV (made by Matsushita Electric Corp. of America). (Courtesy J. C. Penney Co.)

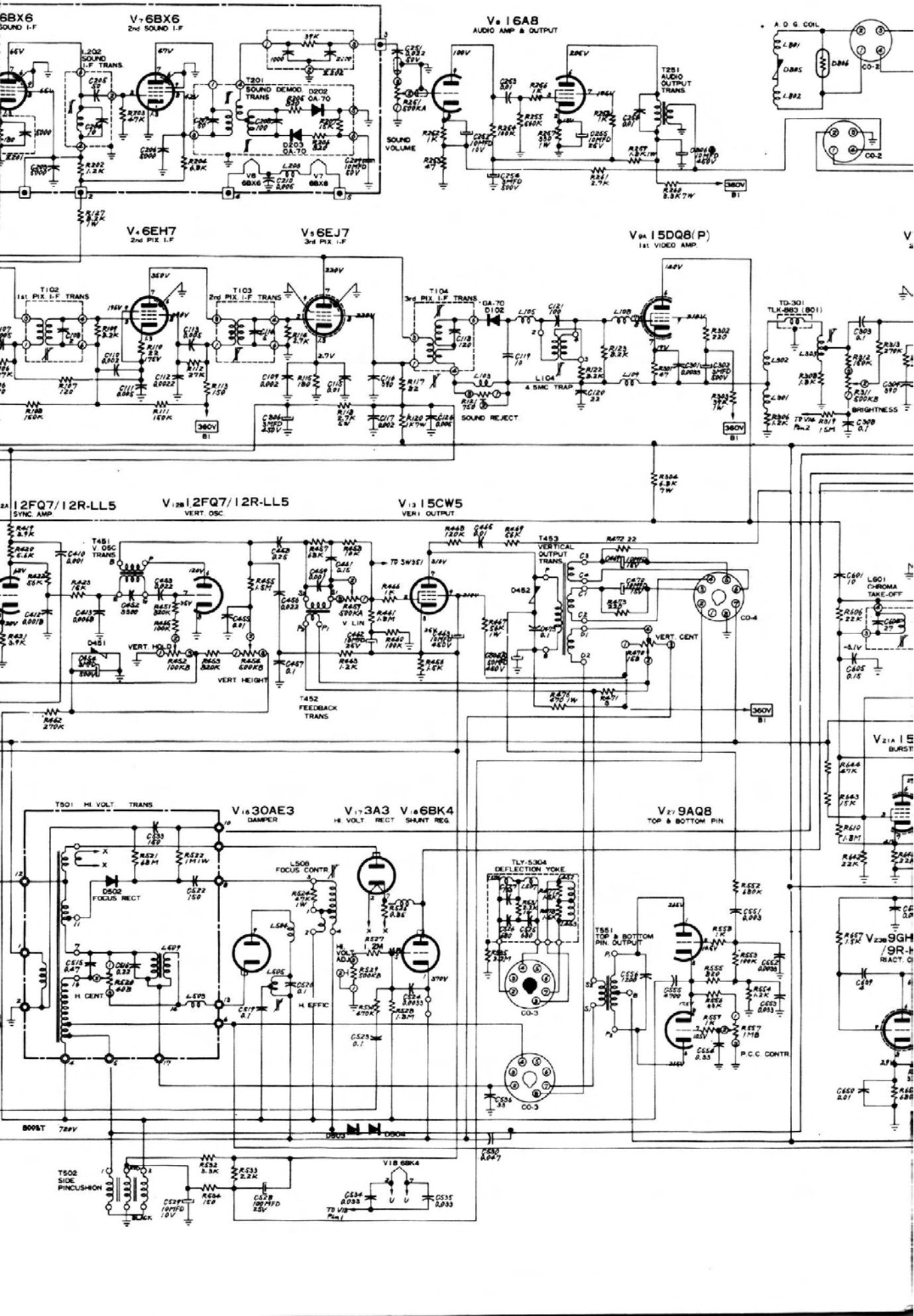
V6 6BX6
SOUND I-F
V7 6BX6
2nd SOUND I-F
L202 SOUND I-F TRANS.
T201 SOUND DEMOD. TRANS
D202 OA-70
D203 OA-70
V8 6BX6
V7 6BX6
V8 16A8
AUDIO AMP & OUTPUT
T251 AUDIO OUTPUT TRANS.
SOUND VOLUME
A.D.G. COIL
D845
D846
CO-2
V4 6EH7
2nd PIX I-F
V5 6EJ7
3rd PIX I-F
V9A 15DQ8(P)
1st VIDEO AMP.
T102 1st PIX I-F TRANS
T103 2nd PIX I-F TRANS
T104 3rd PIX I-F TRANS
OA-70 D102
L104 4.5MC TRAP
SOUND REJECT
TD-301 TLK-883 (801)
BRIGHTNESS
V2A 12FQ7/12R-LL5
SYNC. AMP
V12B 12FQ7/12R-LL5
VERT. OSC
V13 15CW5
VERT OUTPUT
T451 V. OSC TRANS
D451
VERT. HOLD
VERT HEIGHT
V. LIN
T452 FEEDBACK TRANS
T453 VERTICAL OUTPUT TRANS.
D452
VERT. CENT
CO-4
L601 CHROMA TAKE-OFF
V21A 15
BURST
T501 HI. VOLT. TRANS
V16 30AE3
DAMPER
V17 3A3
HI. VOLT. RECT
V18 6BK4
SHUNT REG.
V27 9AQ8
TOP & BOTTOM PIN.
D502 FOCUS RECT
L506 FOCUS CONTR.
H. CENT
H. EFFIC
HI. VOLT. ADJ.
TLY-5304 DEFLECTION YOKE
CO-3
T551 TOP & BOTTOM PIN. OUTPUT
P.C.C. CONTR.
V23 9GH
/9R-H
RIACT. C
D503
D504
T502 SIDE PINCUSHION
V18 6BK4
360V
B1

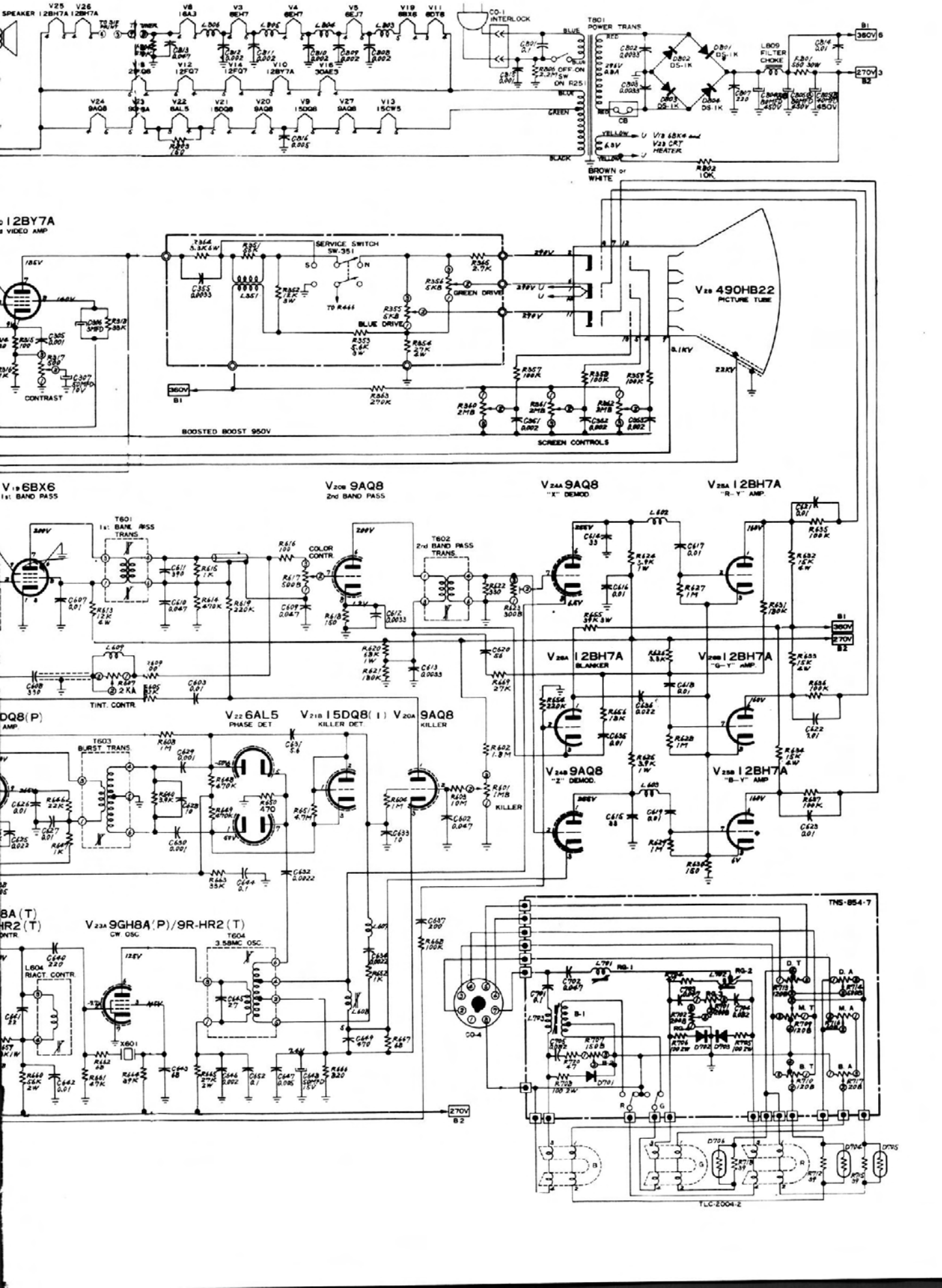
SPEAKER
V25 12BH7A
V26 12BH7A
V8 16A3
V3 6EH7
V4 6EH7
V5 6EJ7
V19 6BX6
V11 6DT8
V18 25Q6
V14 12FQ7
V12 12FQ7
V10 12BY7A
V16 30AE3
V24 9AQ8
V23 9GH8A
V22 6AL5
V21 15DQ8
V20 9AQ8
V9 15DQ8
V27 9AQ8
V13 15CW5
CO-1 INTERLOCK
T801 POWER TRANS
DB01 DS-1K
DB02 DS-1K
DB03 DS-1K
DB04 DS-1K
L809 FILTER CHOKE
B1 380V
270V B2
CB
BLUE
BLACK
GREEN
YELLOW
BROWN or WHITE
R802 10K
V18 12BY7A VIDEO AMP
CONTRAST
SERVICE SWITCH SW-351
TO R446
GREEN DRIVE
BLUE DRIVE
BOOSTED BOOST 950V
V28 490HB22 PICTURE TUBE
8.1KV
22KV
SCREEN CONTROLS
V19 6BX6 1st BAND PASS
V20a 9AQ8 2nd BAND PASS
V24A 9AQ8 "X" DEMOD
V25A 12BH7A "R-Y" AMP.
T601 1st BAND PASS TRANS.
T602 2nd BAND PASS TRANS.
COLOR CONTR.
TINT. CONTR.
V26A 12BH7A BLANKER
V26B 12BH7A "G-Y" AMP.
V24B 9AQ8 "Z" DEMOD.
V25B 12BH7A "B-Y" AMP.
V22 6AL5 PHASE DET.
V21B 15DQ8(1) KILLER DET.
V20A 9AQ8 KILLER
T603 BURST TRANS.
KILLER
V23A 9GH8A(P)/9R-HR2(T) CW OSC.
T604 3.58MC OSC.
L604 RIACT. CONTR.
X601
TNS-854-7
CO-4
TLC-2004-2

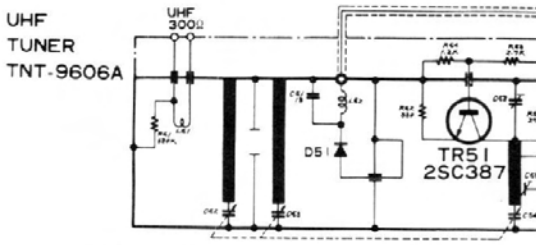

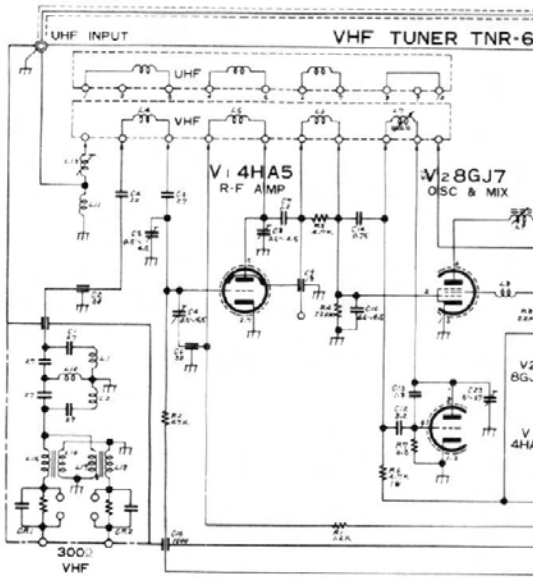

WAVEFORM PATTERNS

These waveforms were taken with the receiver AGC control adjusted for peak-to-peak output of 70 Volts at the collector of Tr301. All monochrome voltages were taken with average signal and all chroma voltages were taken with a color bar generator connected to antenna input terminals. Chroma peak-to-peak voltages were taken with the color control set for turn (approximately) its control range, tint control set for proper color bars (approximately) mid-range and all other controls set for normal viewing.

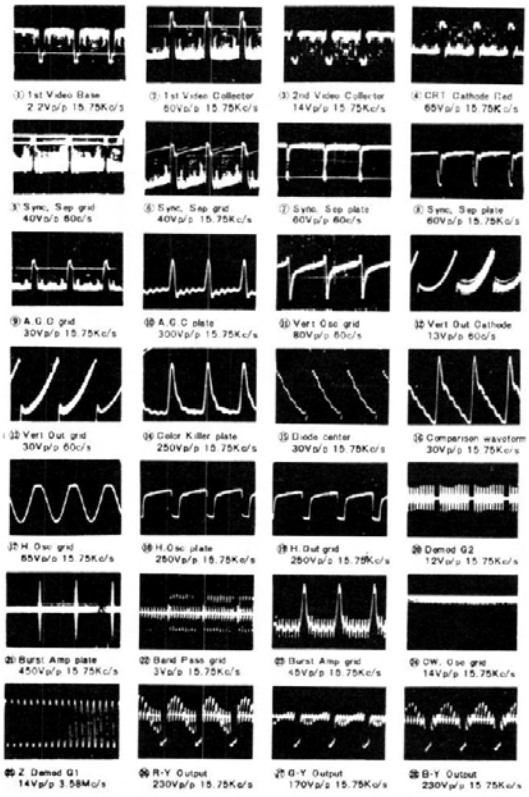

Panel M. Panasonic Model CT-93P color TV.
Electric Corp. of America)

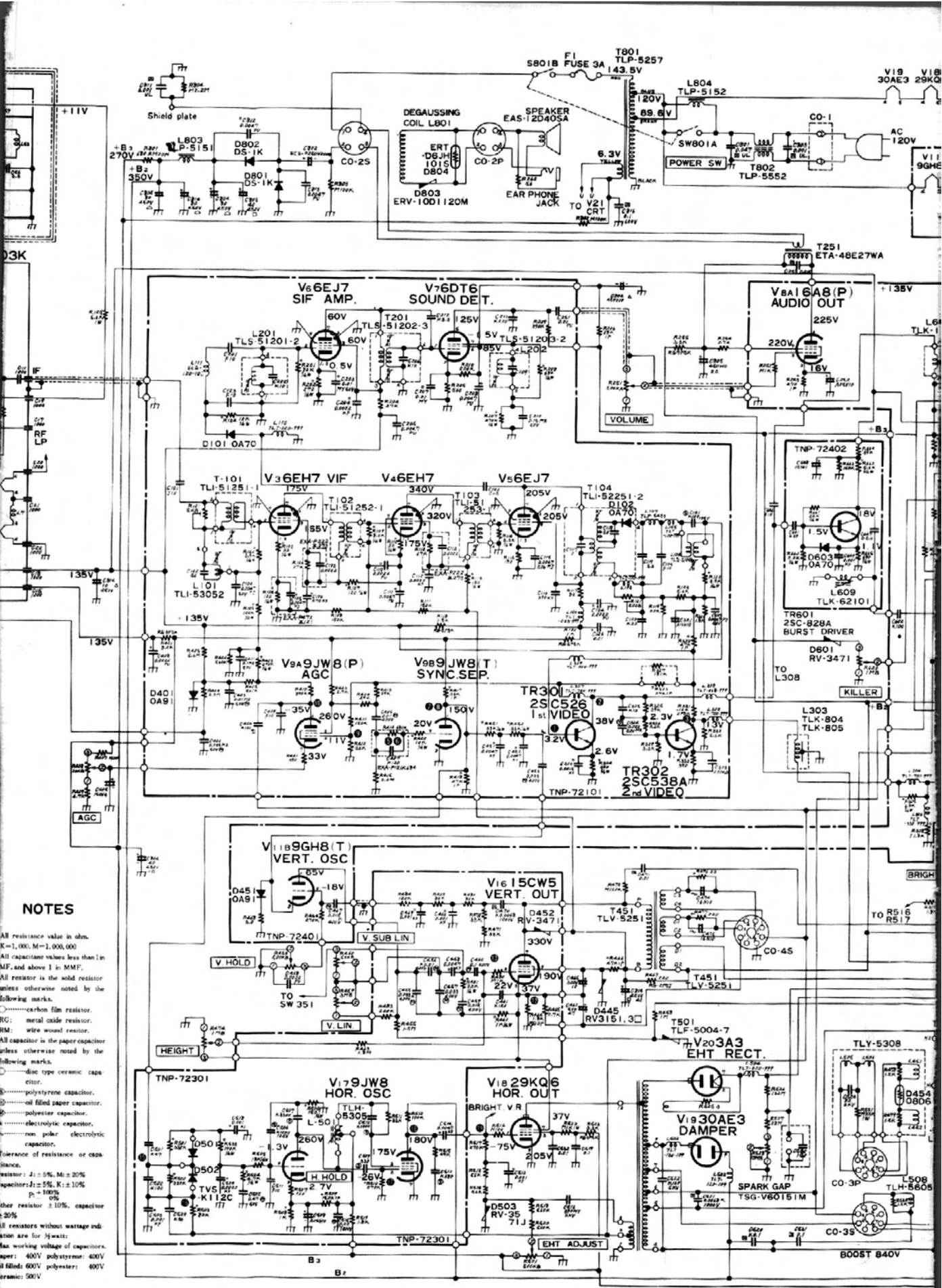

NOTES

All resistance value in ohm. K=1,000, M=1,000,000

All capacitance values less than 1 in MF, and above 1 in MMF.

All resistor is the solid resistor unless otherwise noted by the following marks.

- ○ carbon film resistor.
- RG: metal oxide resistor.
- RM: wire wound resistor.

All capacitor is the paper capacitor unless otherwise noted by the following marks.

- ○ disc type ceramic capacitor.
- ▷ polystyrene capacitor.
- ▯ oil filled paper capacitor.
- ▯ polyester capacitor.
- ⊣⊢ electrolytic capacitor.
- ⊣⊢ non polar electrolytic capacitor.

Tolerance of resistance or capacitance.

resistor: J: ±5%, M: ±20%

capacitors: J: ±5%, K: ±10%

P: +100% 0%

other resistor ±10%, capacitor ±20%

All resistors without wattage indication are for ½watt.

Max working voltage of capacitors.

paper: 400V polystyrene: 400V

oil filled: 600V polyester: 400V

ceramic: 500V

Courtesy Matsushita

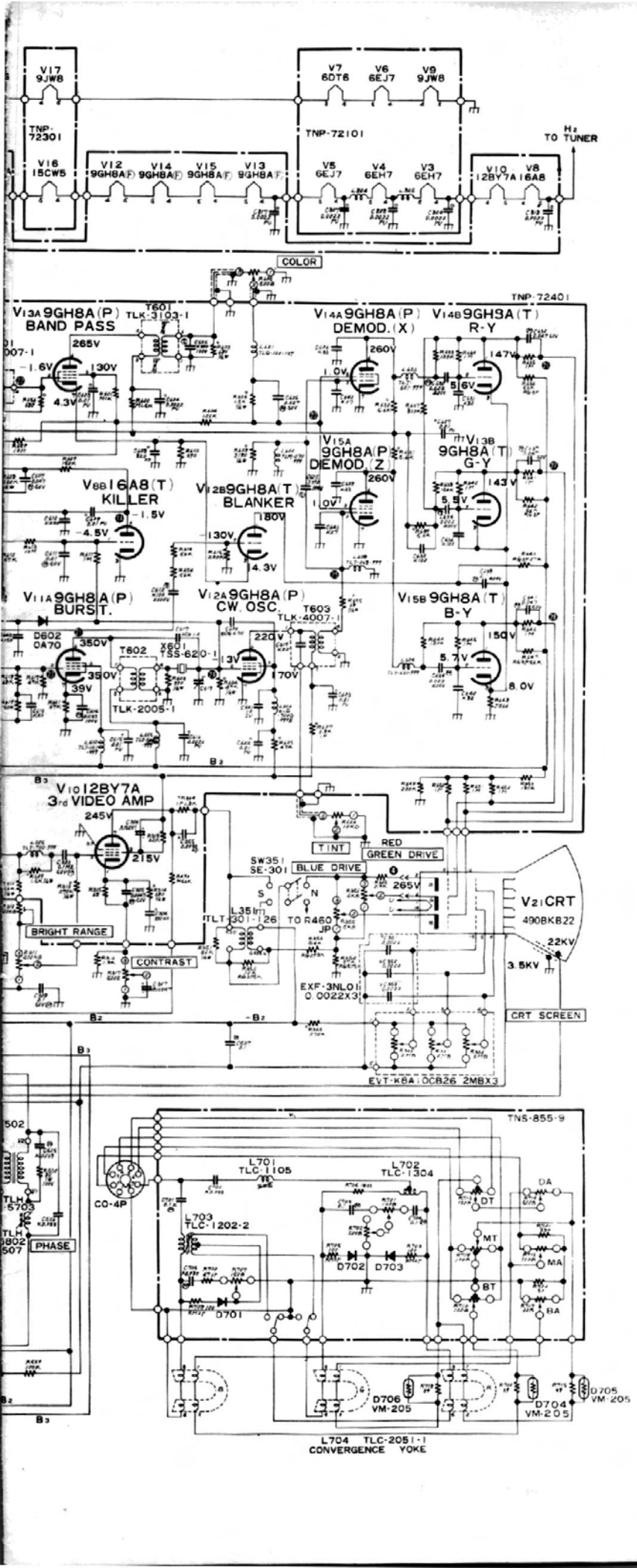
V17 9JW8
TNP-72301
V16 15CW5
V12 9GH8A(F)
V14 9GH8A(F)
V15 9GH8A(F)
V13 9GH8A(F)
V7 6DT6
V6 6EJ7
V9 9JW8
TNP-72101
V5 6EJ7
V4 6EH7
V3 6EH7
V10 12BY7A
V8 16A8
H2 TO TUNER
COLOR
TNP-72401
V13A 9GH8A(P) BAND PASS
T601 TLK-3103-1
265V
130V
4.3V
V14A 9GH8A(P) DEMOD.(X)
260V
1.0V
V14B 9GH9A(T) R-Y
147V
5.6V
V15A 9GH8A(P) DEMOD.(Z)
260V
1.0V
V13B 9GH8A(T) G-Y
143V
5.5V
V8B 16A8(T) KILLER
-1.5V
-4.5V
V12B 9GH8A(T) BLANKER
180V
130V
14.3V
V11A 9GH8A(P) BURST.
D602 0A70
350V
39V
V12A 9GH8A(P) CW.OSC.
T603 TLK-4007-1
220V
13V
170V
T602
X601 155-6201-1
TLK-2005-1
V15B 9GH8A(T) B-Y
150V
5.7V
8.0V
B3
V10 12BY7A 3rd VIDEO AMP
245V
215V
TINT
RED
GREEN DRIVE
SW351 SE-301
BLUE DRIVE
S
N
265V
L351 TLT-301-126
TO R460 JP
V21 CRT 490BKB22
22KV
3.5KV
BRIGHT RANGE
CONTRAST
EXF-3NL01 0.0022X3
CRT SCREEN
EVT-K8A-0CB26-2MBX3
B2
B3
TNS-855-9
L701 TLC-1105
L702 TLC-1304
L703 TLC-1202-2
CO-4P
DA
DT
MT
MA
BT
BA
D702
D703
D701
PHASE
D706 VM-205
D704 VM-205
D705 VM-205
L704 TLC-2051-1
CONVERGENCE YOKE

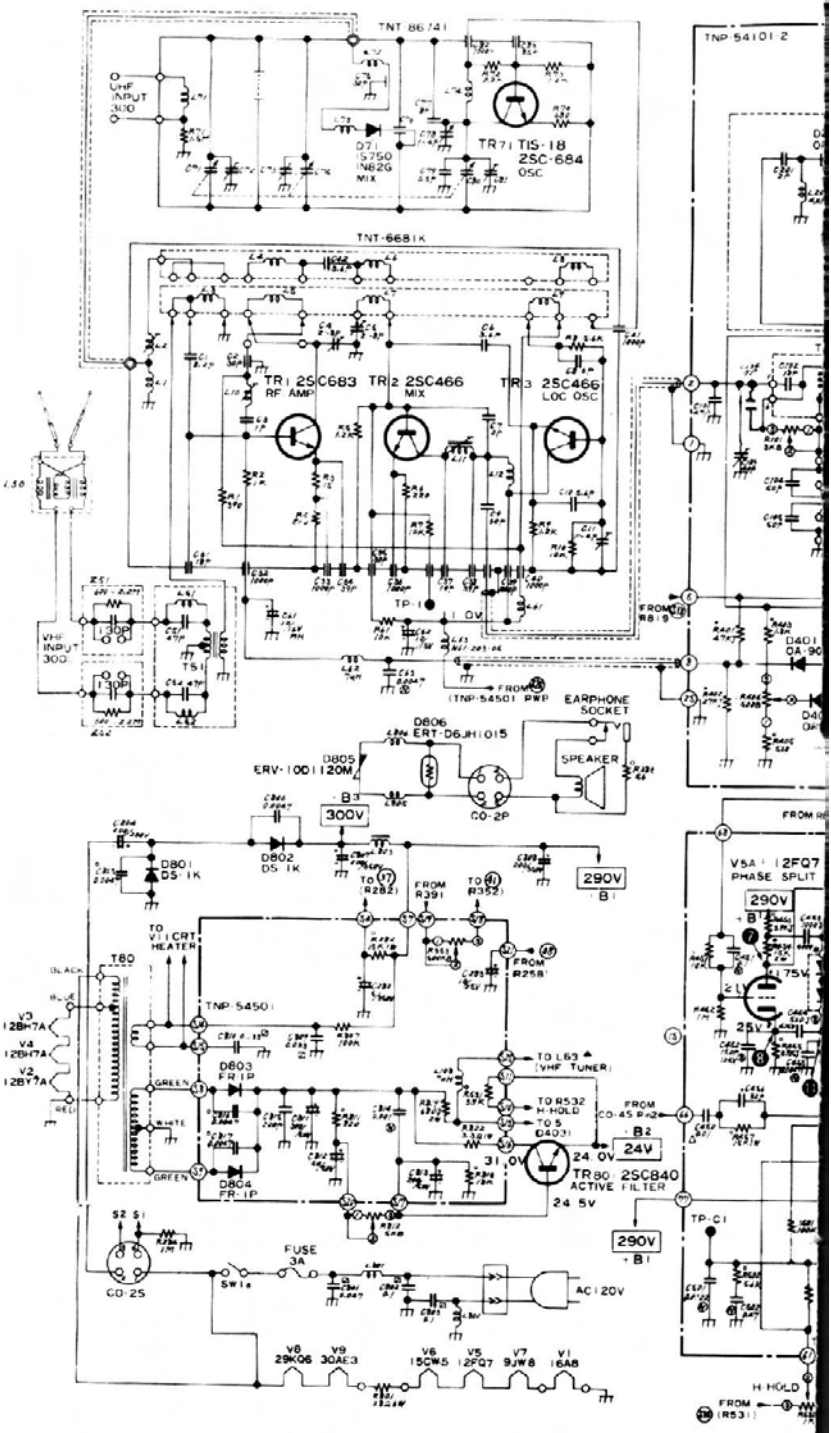

NOTES

1. RESISTANCES ARE SHOWN IN OHMS; K=1000 M=1,000,000.
2. CAPACITANCES ARE SHOWN IN MFD.UNLESS OTHERWISE NOTED P=MMFD
3. ALL RESISTORS ARE THE SOLID RESISTOR UNLESS OTHERWISE NOTED WITH THE FOLLOWING MARKS.
   - ·····CARBON FILM RESISTOR
   - ●·····METAL OXIDE RESISTOR
   - ▲·····HERMETICALLY SEALED RESISTOR
4. ALL CAPACITORS ARE THE DISCTYPE CERAMIC CAPACITOR 50V OR 500V ·····500V UNLESS OTHERWISE NOTED WITH THE FOLLOWING MARKS
   - ·····OILFILLED PAPER CAPACITOR; ✓500V, ⩘1000V
   - P·····PAPER CAPACITOR; 400V
   - S·····POLYSTYRENE CAPACITOR
   - N·M **M**·····POLYESTER CAPACITOR; N50V, M100V 400V, **M**600V
5. TOLERANCES OF RESISTANCE J·····5% OTHERWISE ±10%
   TOLERANCES OF CAPACITANCE J·····5% OTHRWISE ±10% OR 20%
   RESISTORS WITHOUT WATTAGE INDICATION ARE ¼ WATT OR ½WATT
6. VOLTAGES ARE WITH SIGNAL
   - ▲·····NO SIGNAL

   THEY ARE MEASURED WITH VTVM

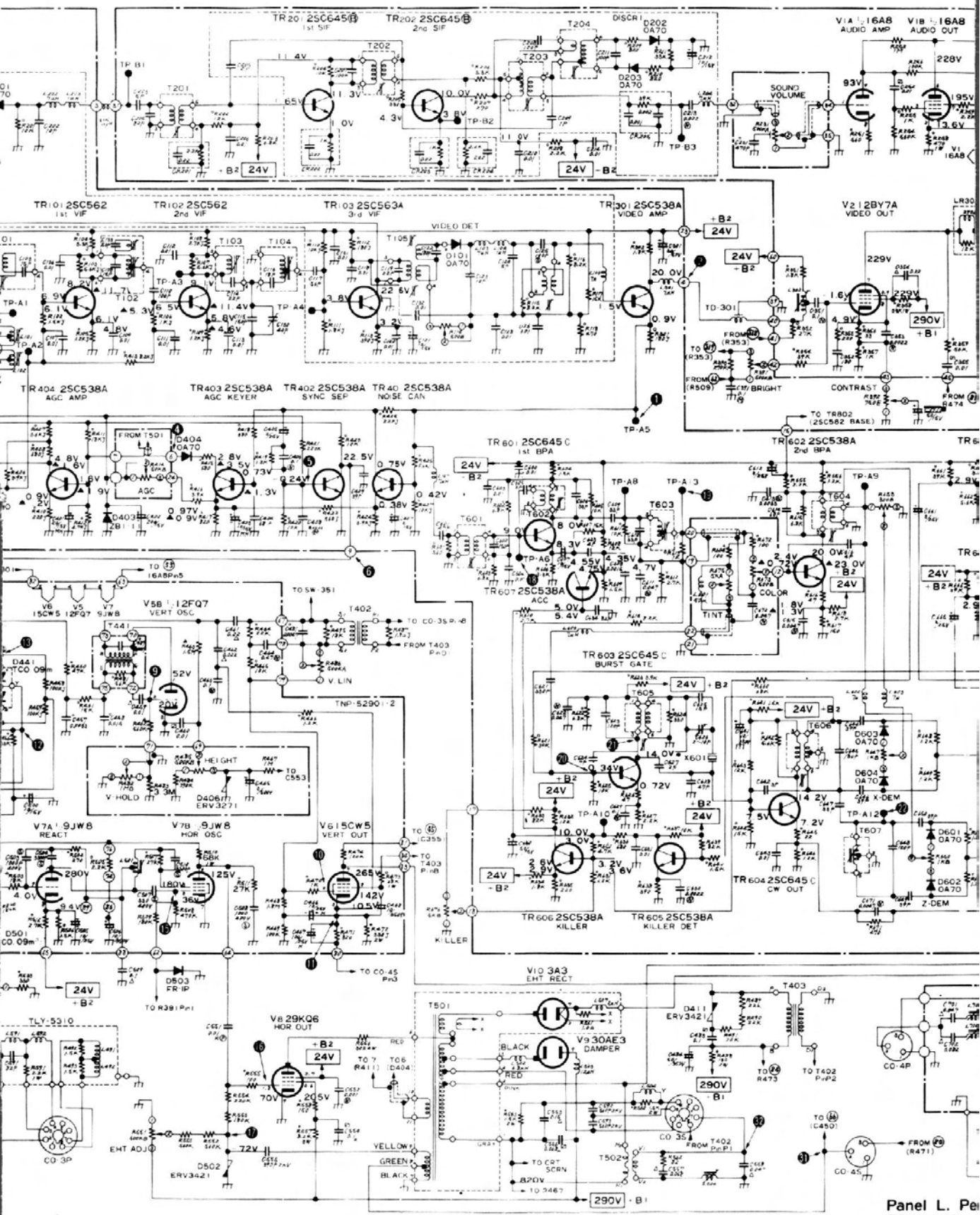

Panel L. Pe
Electric Corp

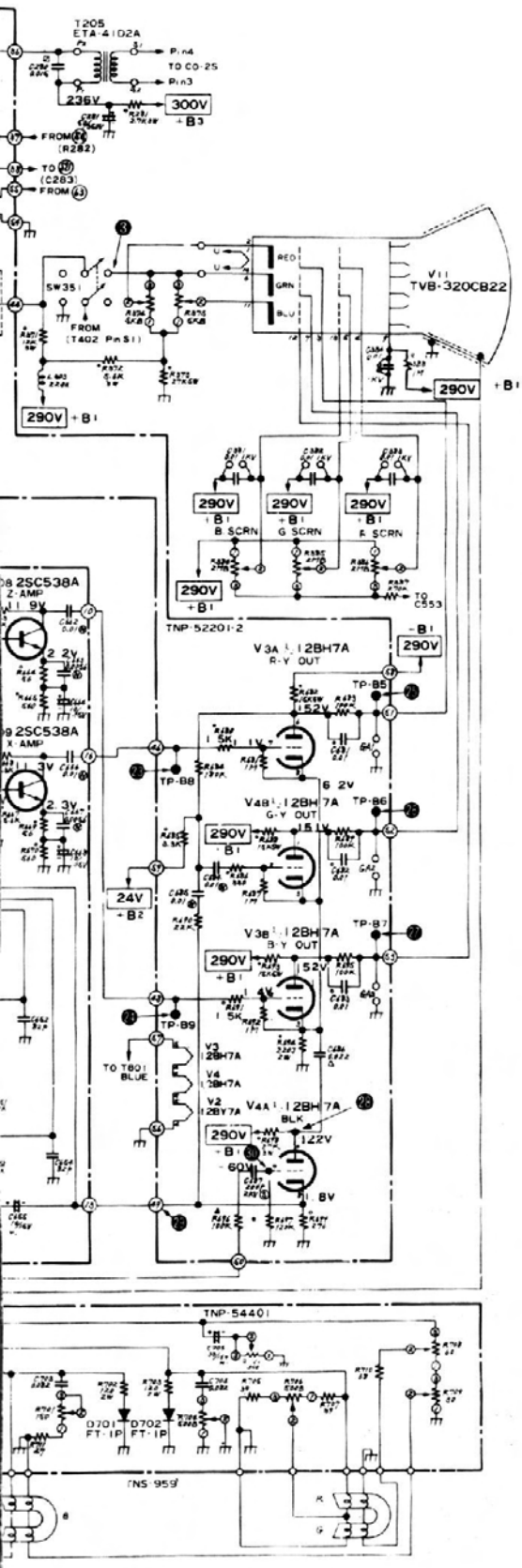

ncrest Model 2881 color TV (made by Matsushita
. of America). (Courtesy J. C. Penney Co.)

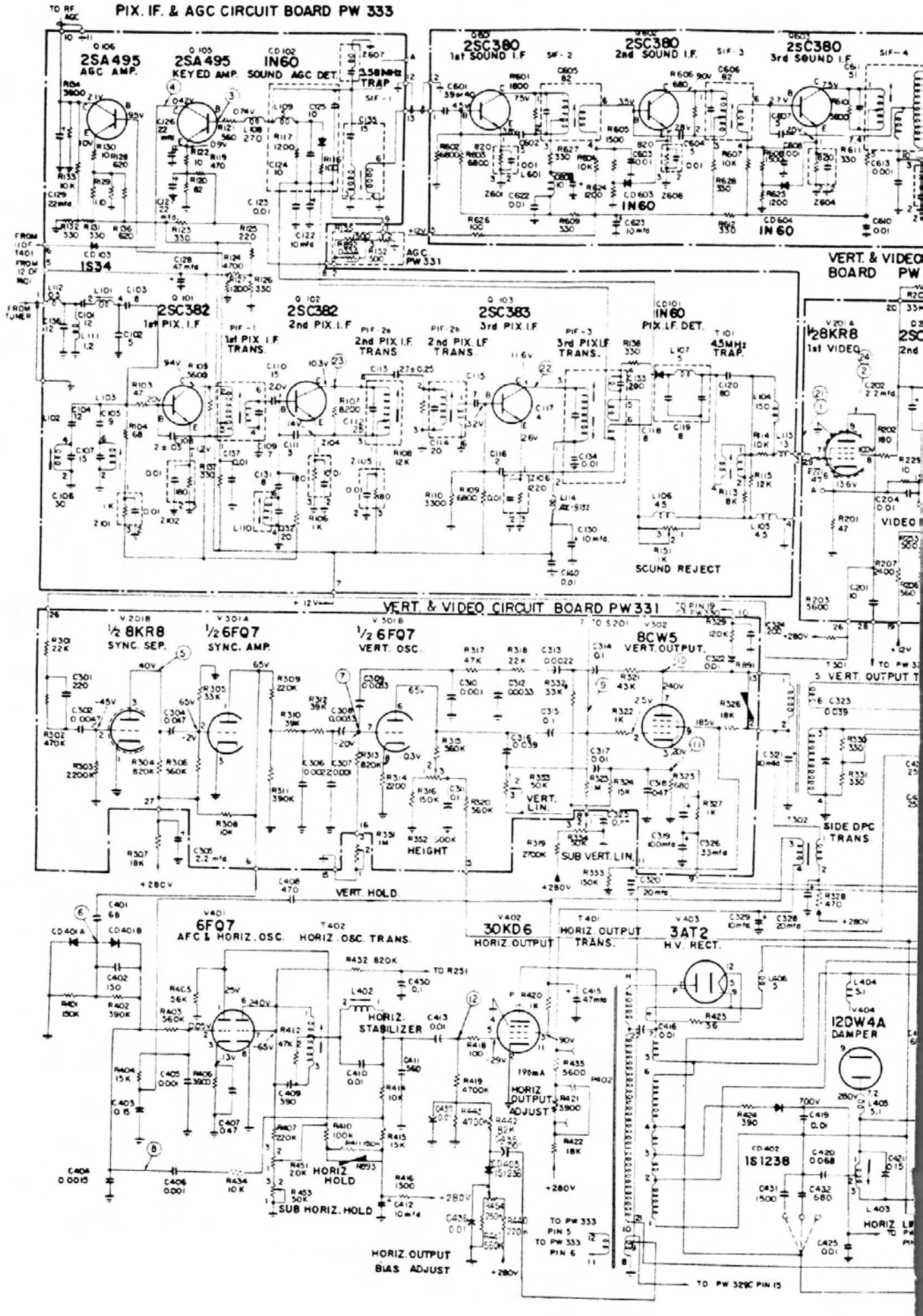
PIX. IF. & AGC CIRCUIT BOARD PW 333
TO RF AGC
2SA495 AGC AMP.
2SA495 KEYED AMP.
IN60 SOUND AGC DET.
3.58MHz TRAP
2SC380 1st SOUND I.F.
2SC380 2nd SOUND I.F.
2SC380 3rd SOUND I.F.
IN60
AGC PW 331
1S34
FROM 11 OF T401
FROM 12 OF T401
FROM TUNER
2SC382 1st PIX. I.F.
2SC382 2nd PIX. I.F.
2SC383 3rd PIX. I.F.
1st PIX. I.F. TRANS.
2nd PIX. I.F. TRANS.
2nd PIX. I.F. TRANS.
3rd PIX. I.F. TRANS.
IN60 PIX. I.F. DET.
4.5MHz TRAP.
SOUND REJECT
VERT. & VIDEO BOARD PW
1/2 8KR8 1st VIDEO
VIDEO
VERT. & VIDEO CIRCUIT BOARD PW331
1/2 8KR8 SYNC. SEP.
1/2 6FQ7 SYNC. AMP.
1/2 6FQ7 VERT. OSC.
8CW5 VERT. OUTPUT.
VERT. OUTPUT T
VERT. LIN.
HEIGHT
SUB VERT. LIN.
SIDE DPC TRANS.
VERT. HOLD
6FQ7 AFC & HORIZ. OSC.
HORIZ. OSC. TRANS.
30KD6 HORIZ. OUTPUT
HORIZ. OUTPUT TRANS.
3AT2 H.V. RECT.
HORIZ. STABILIZER
HORIZ. OUTPUT ADJUST
12DW4A DAMPER
1S1238
HORIZ. HOLD
SUB HORIZ. HOLD
HORIZ. OUTPUT BIAS ADJUST
TO PW 333 PIN 5
TO PW 333 PIN 6
TO PW 329C PIN 15

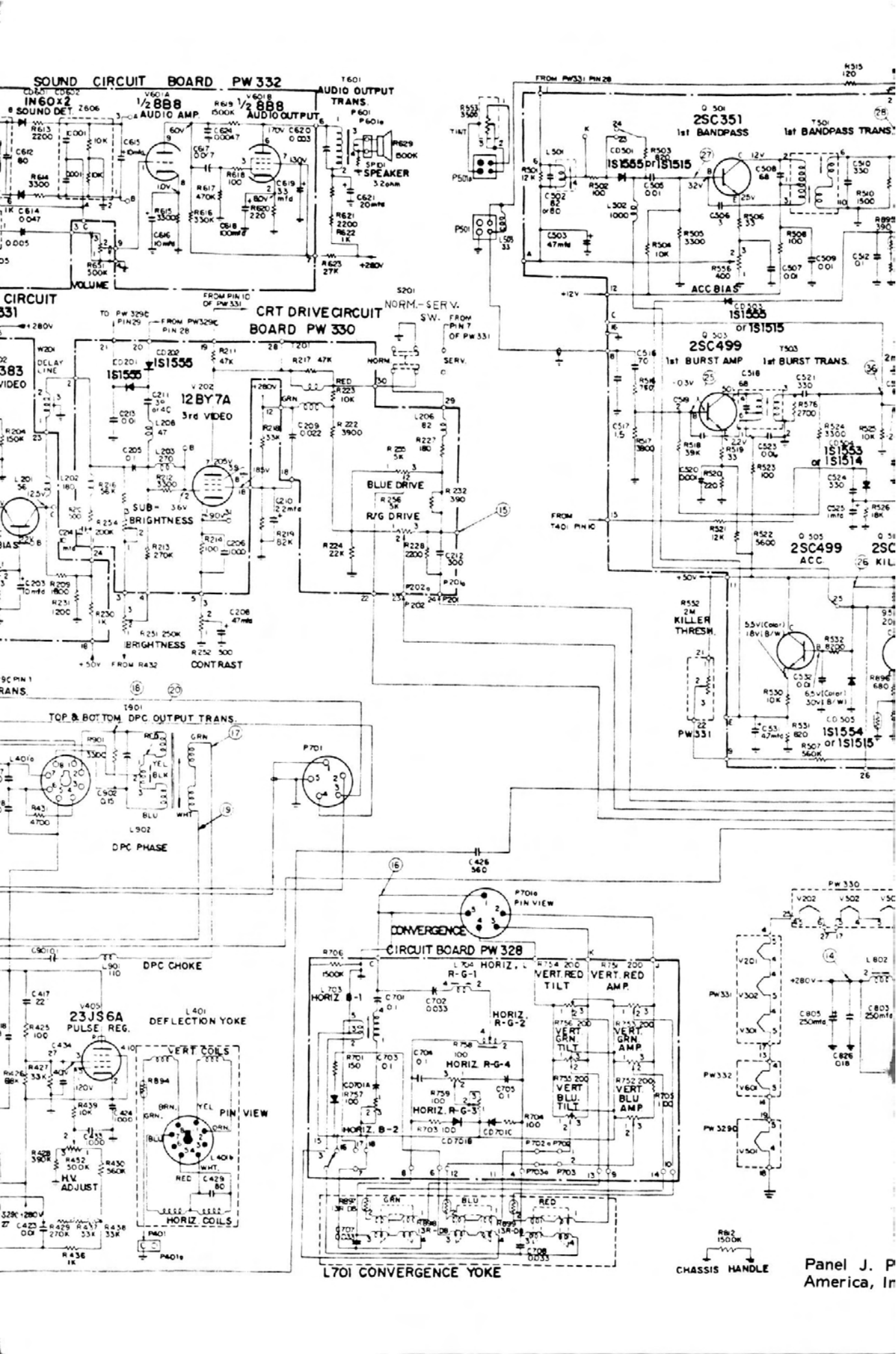
SOUND CIRCUIT BOARD PW 332
AUDIO OUTPUT TRANS.
SPEAKER
VOLUME
CRT DRIVE CIRCUIT BOARD PW 330
12BY7A
3rd VIDEO
BLUE DRIVE
R/G DRIVE
BRIGHTNESS
CONTRAST
NORM.-SERV. SW.
2SC351
1st BANDPASS
2SC499
1st BURST AMP
1st BURST TRANS.
ACC BIAS
2SC499
ACC.
KILLER THRESH.
TOP & BOTTOM DPC OUTPUT TRANS.
DPC PHASE
DPC CHOKE
23JS6A
PULSE REG.
DEFLECTION YOKE
VERT COILS
HORIZ COILS
H.V. ADJUST
CONVERGENCE CIRCUIT BOARD PW 328
L701 CONVERGENCE YOKE
CHASSIS HANDLE
Panel J. P
America, In

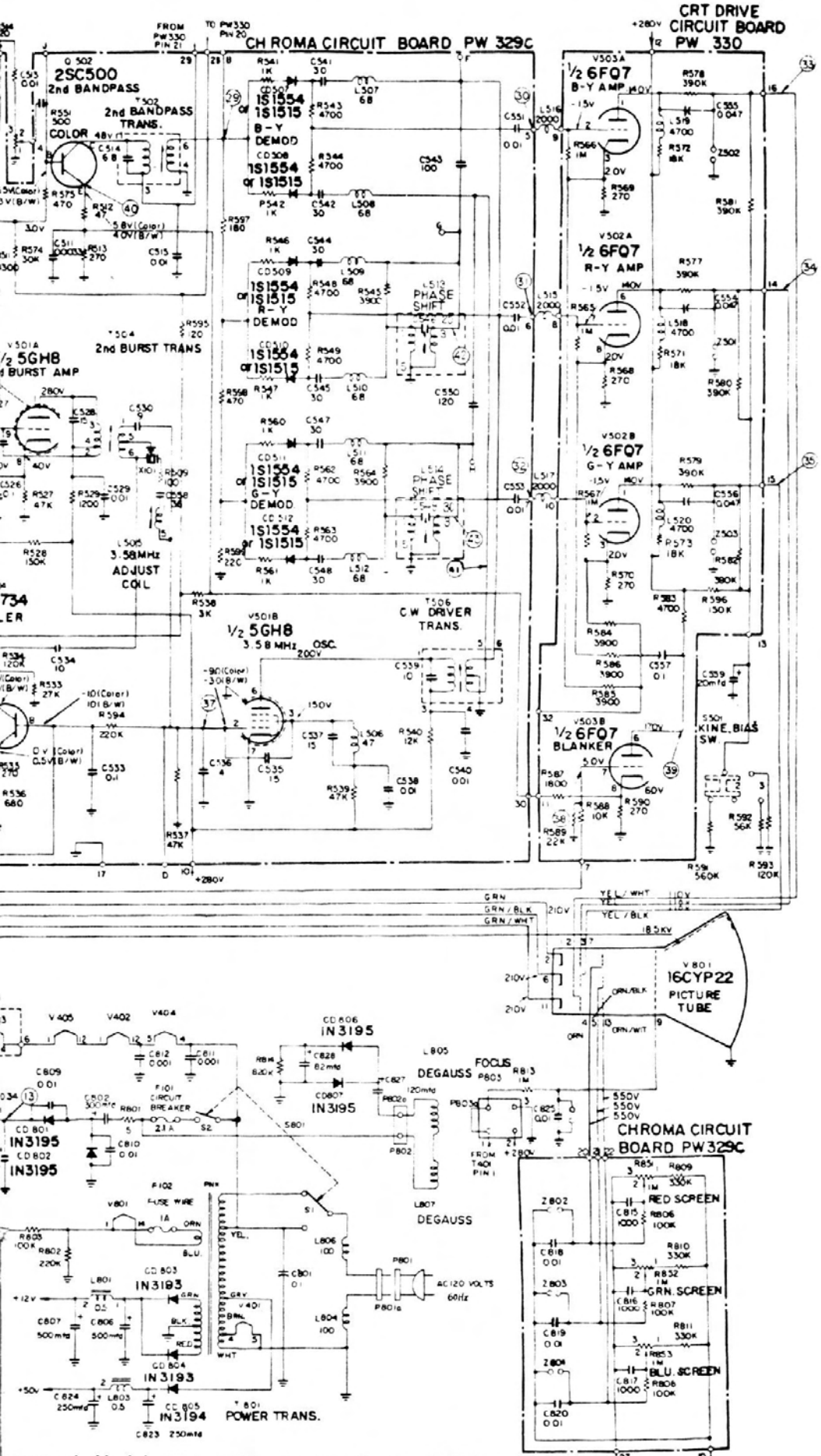

enncrest Model 2884 color TV (made by Toshiba c.). (Courtesy J. C. Penney Co.)

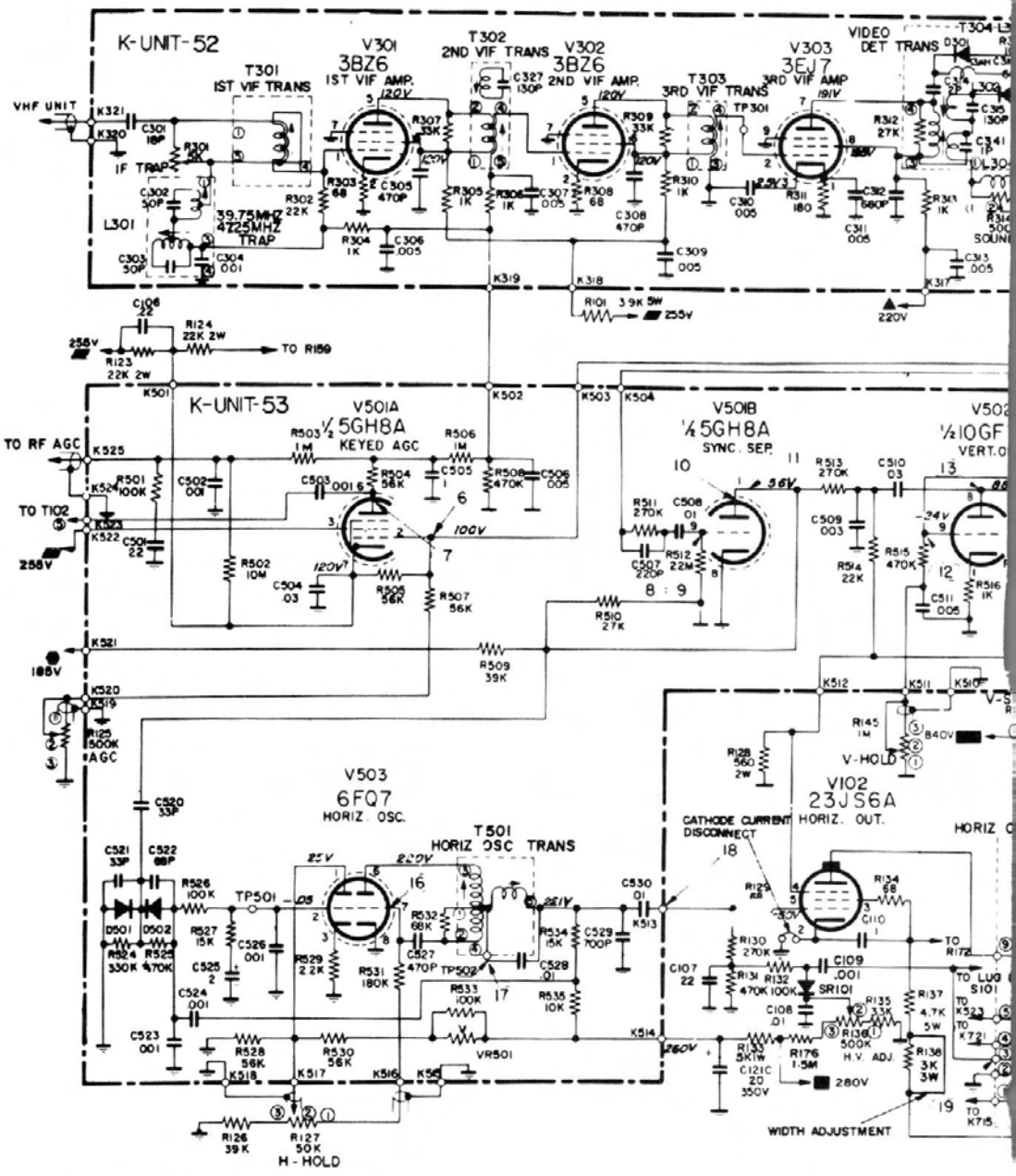

WAVEFORM MEASUREMENTS
CONDITION: COLOR BAR GENERATOR (GATED RAINBOW TYPE)
1 VOLT PEAK TO PEAK AT CONTROL GRID OF FIRST
VIDEO AMP AND APPROX. -0.2 VOLTS RF AGC BIAS.

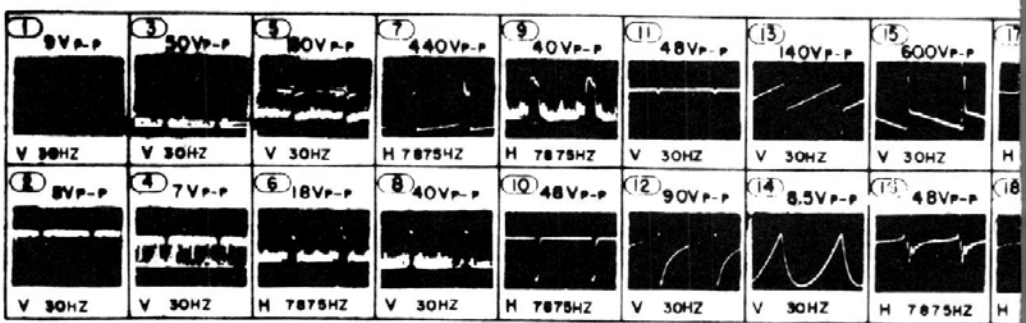

Panel D. Midland Model 15-214 TV. (Courtesy Midland International Corp.)

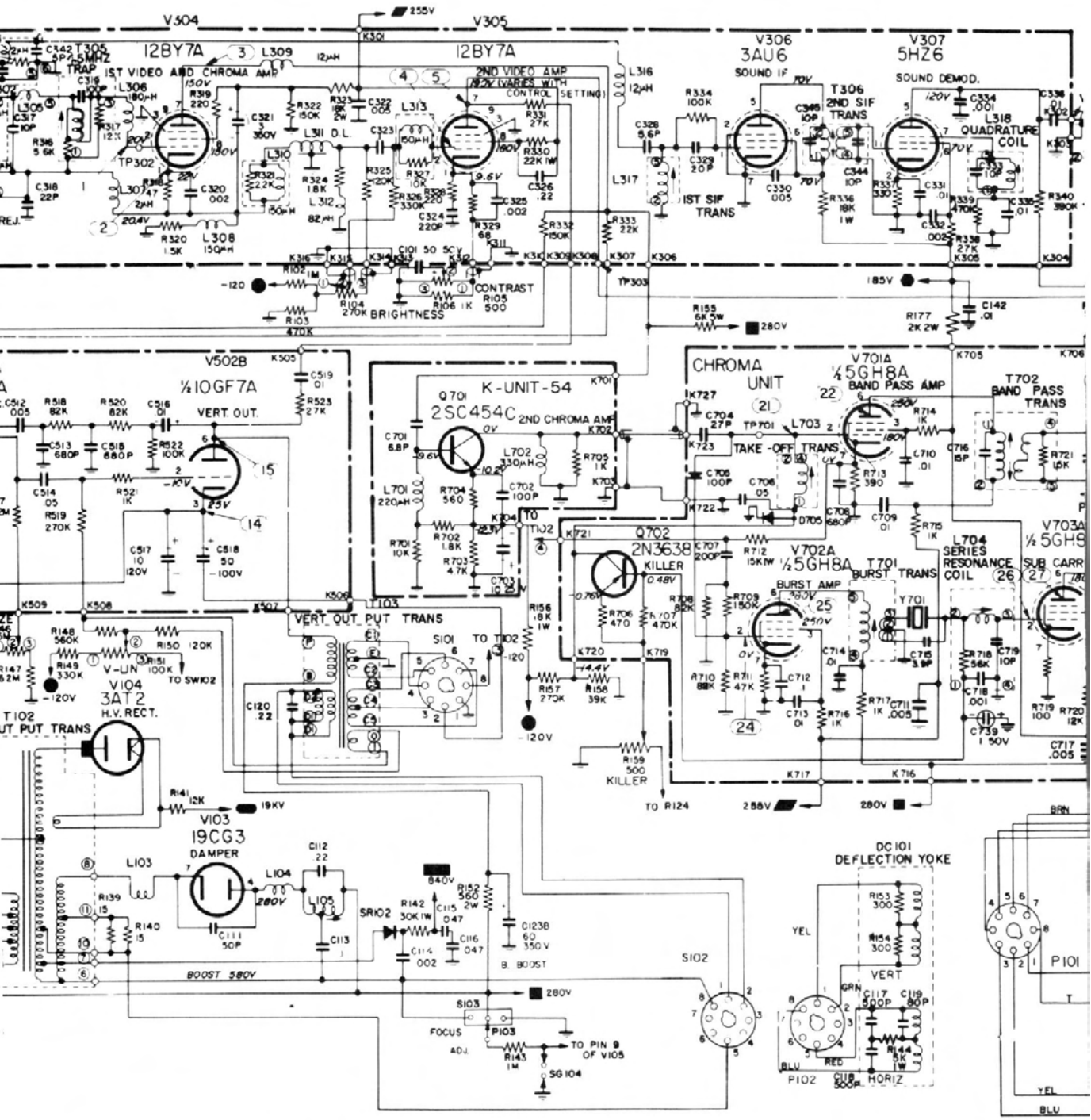
V304
12BY7A
IST VIDEO AND CHROMA AMP
V305
12BY7A
2ND VIDEO AMP
V306
3AU6
SOUND IF
V307
5HZ6
SOUND DEMOD.
T306
2ND SIF TRANS
L318
QUADRATURE COIL
IST SIF TRANS
TRAP
TP302
TP303
CONTRAST
BRIGHTNESS
V502B
½10GF7A
VERT. OUT.
K-UNIT-54
Q701
2SC454C
2ND CHROMA AMP
Q702
2N3638
KILLER
CHROMA UNIT
V701A
½5GH8A
BAND PASS AMP
T702
BAND PASS TRANS
TAKE-OFF TRANS
V702A
½5GH8A
BURST AMP
T701
BURST TRANS
L704
SERIES RESONANCE COIL
V703A
½5GH8
SUB CARR
VERT. OUT. PUT TRANS
T102
V104
3AT2
H.V. RECT.
V103
19CG3
DAMPER
DC101
DEFLECTION YOKE
P101
S101
S102
S103
P103
TO R124
TO T102
TO SW102
TO PIN 9 OF V105
SG104
B. BOOST
BOOST 580V
FOCUS ADJ.
HORIZ
VERT
255V
280V
185V
19KV
-120
-100V
K301
K302
K303
K304
K305
K306
K307
K308
K309
K310
K311
K312
K313
K314
K315
K316
K501
K502
K503
K504
K505
K506
K507
K508
K509
K701
K702
K703
K704
K705
K706
K716
K717
K719
K720
K721
K722
K723
K727

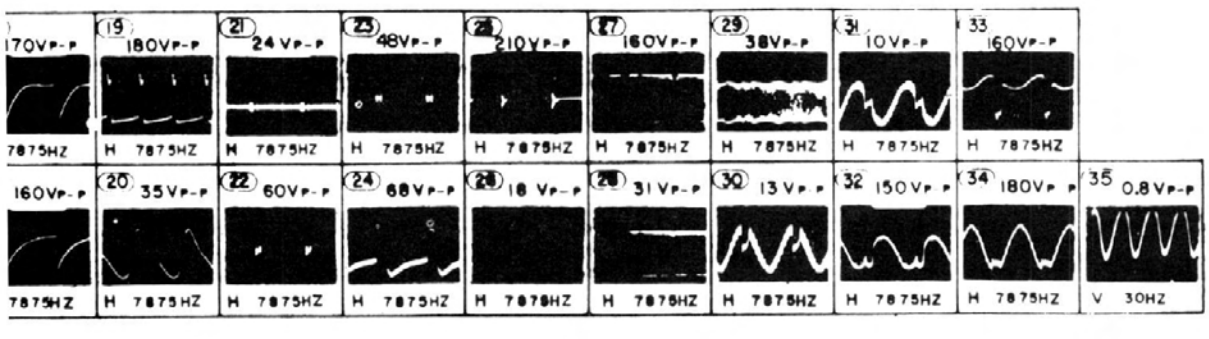
19 180VP-P H 7875HZ
21 24 VP-P H 7875HZ
23 48VP-P H 7875HZ
25 210VP-P H 7875HZ
27 160VP-P H 7875HZ
29 38VP-P H 7875HZ
31 10VP-P H 7875HZ
33 160VP-P H 7875HZ
20 35VP-P H 7875HZ
22 60VP-P H 7875HZ
24 68VP-P H 7875HZ
26 18 VP-P H 7875HZ
28 31 VP-P H 7875HZ
30 13 VP-P H 7875HZ
32 150VP-P H 7875HZ
34 180VP-P H 7875HZ
35 0.8VP-P V 30HZ

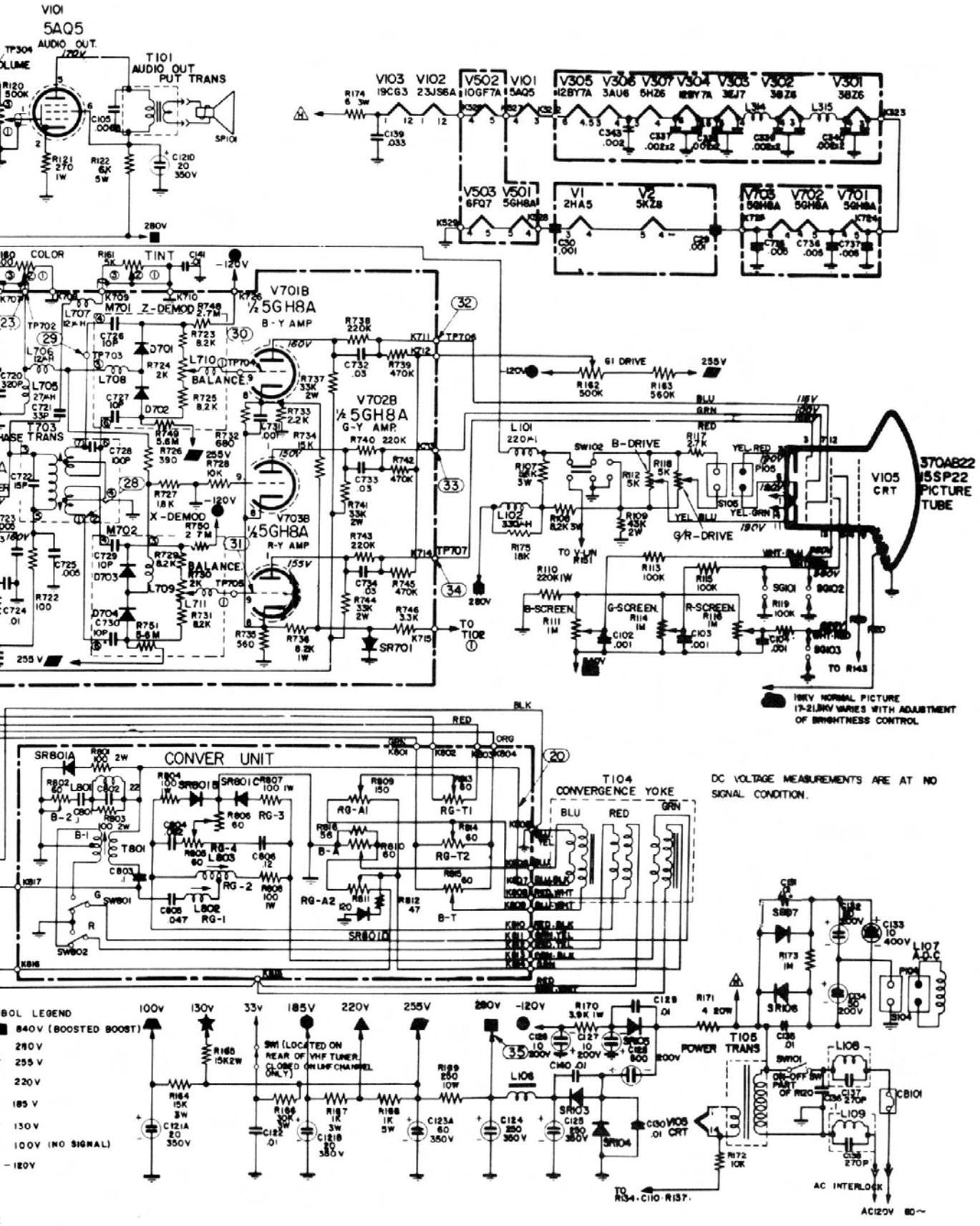
V101
5AQ5
AUDIO OUT.
T101
AUDIO OUT
PUT TRANS
V103 19CG3
V102 23JS6A
V502 10GF7A
V101 5AQ5
V305 12BY7A
V306 3AU6
V307 5HZ6
V304 12BY7A
V303 3EJ7
V302 3BZ6
V301 3BZ6
V503 6FQ7
V501 5GH8A
V1 2HA5
V2 5KZ8
V703 5GH8A
V702 5GH8A
V701 5GH8A
COLOR
TINT
Z-DEMOD
V701B
½5GH8A
B-Y AMP
BALANCE
V702B
½5GH8A
G-Y AMP
X-DEMOD
V703B
½5GH8A
R-Y AMP
G1 DRIVE
B-DRIVE
G/R-DRIVE
V105
CRT
370AB22
15SP22
PICTURE
TUBE
B-SCREEN
G-SCREEN
R-SCREEN
TO R143
19KV NORMAL PICTURE
17-21.1KV VARIES WITH ADJUSTMENT
OF BRIGHTNESS CONTROL
CONVER UNIT
T104
CONVERGENCE YOKE
DC VOLTAGE MEASUREMENTS ARE AT NO
SIGNAL CONDITION.
BOL LEGEND
840V (BOOSTED BOOST)
280V
255V
220V
185V
130V
100V (NO SIGNAL)
-120V
SW1 (LOCATED ON
REAR OF VHF TUNER
CLOSED ON UHF CHANNEL
ONLY)
POWER TRANS
T105
ON-OFF SW
PART OF R120
AC INTERLOCK
AC120V 60~
TO R134·C110·R137·

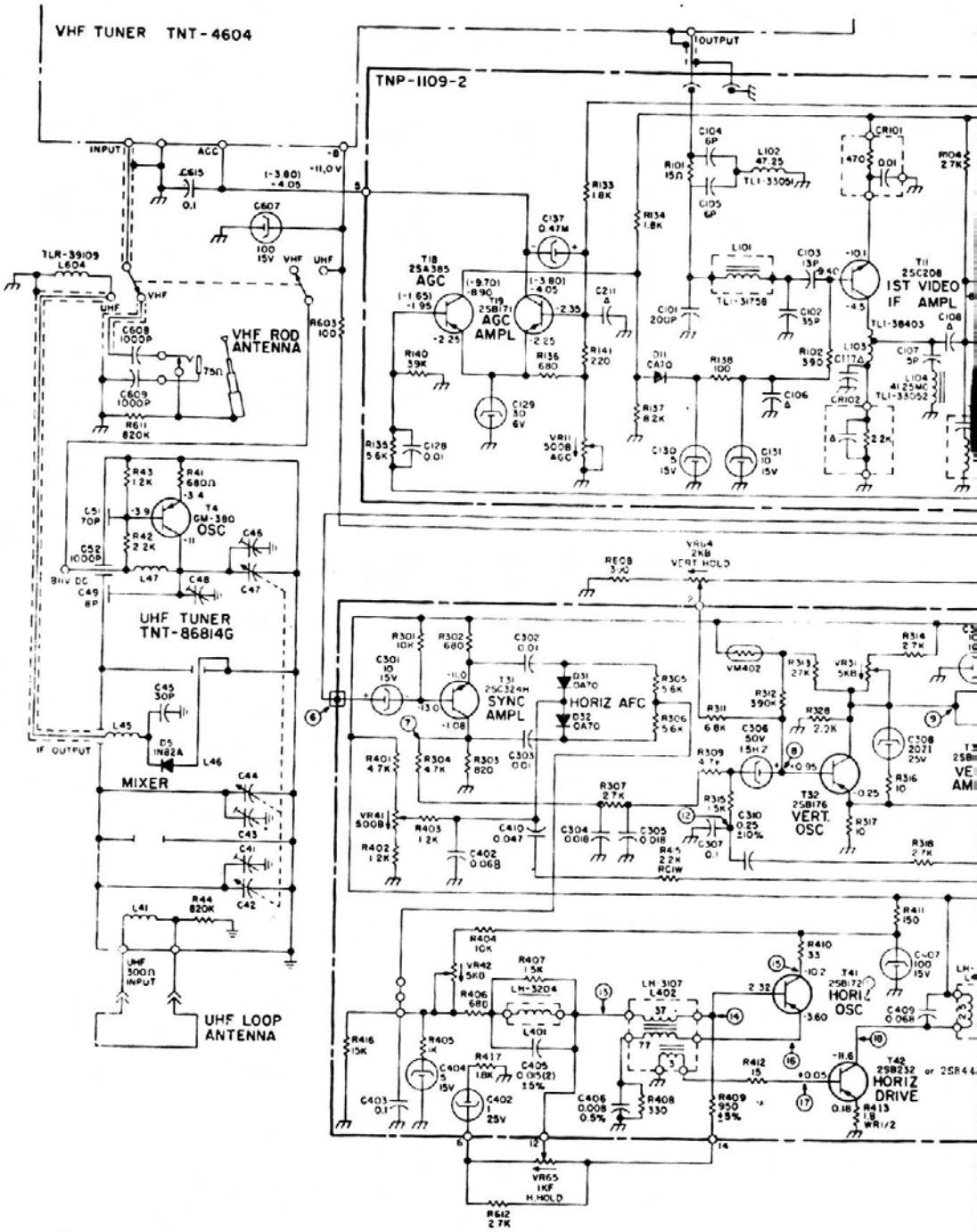

Panel F. Penncrest Model 1314 portable TV (made by Matsushita Electric Corp. of America). (Courtesy J. C. Penney Co.)

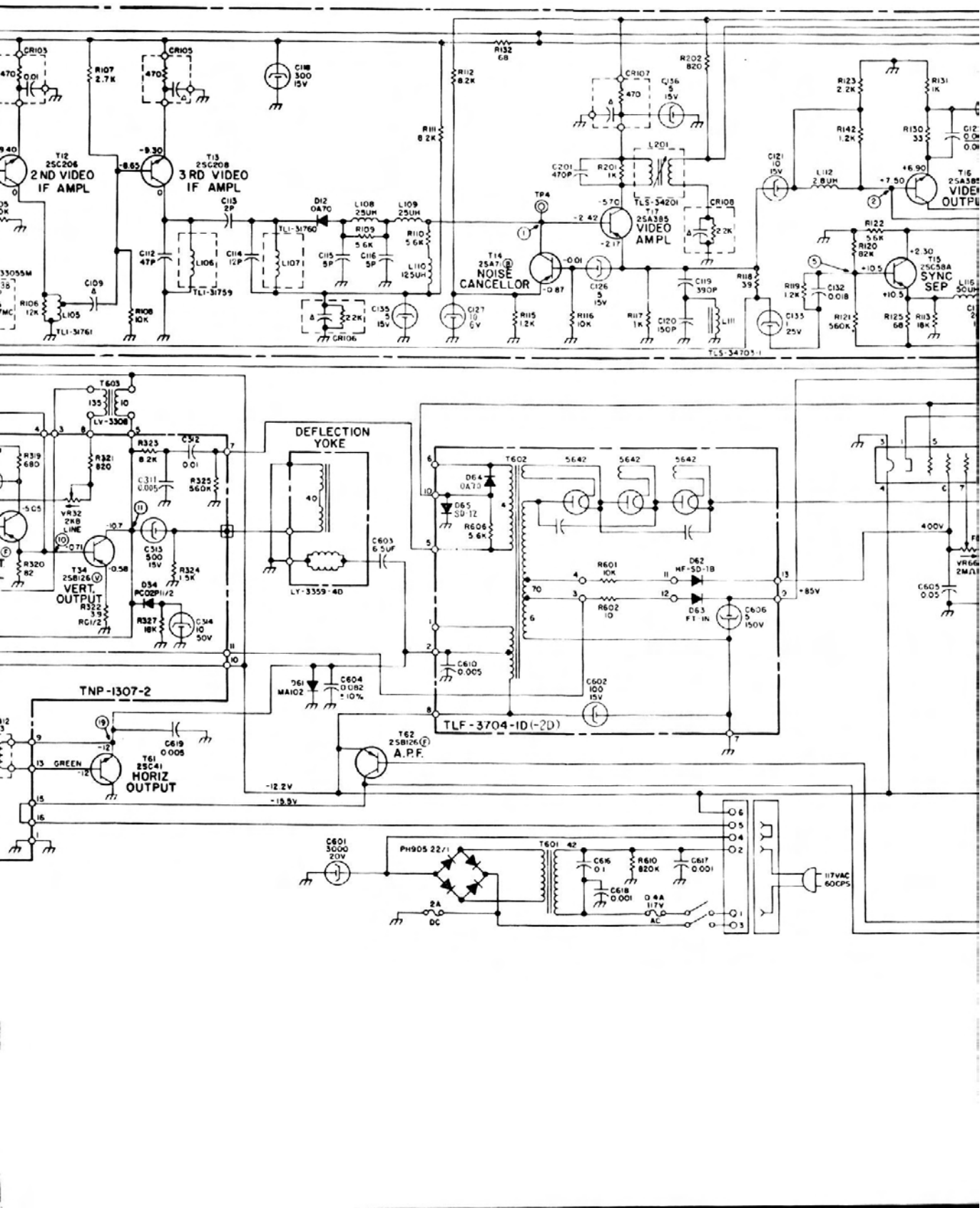
T12 2SC206 2ND VIDEO IF AMPL
T13 2SC208 3RD VIDEO IF AMPL
T14 2SA7 NOISE CANCELLOR
T17 2SA385 VIDEO AMPL
T15 2SC58A SYNC SEP
T16 2SA385 VIDEO OUTPUT
TLS-34201
TLS-34705-1
TLI-31760
TLI-31759
TLI-31761
CR103
CR105
CR106
CR107
CR108
L108 25UH
L109 25UH
L110 125UH
L111
L112 2.8UH
L201
TP4
DEFLECTION YOKE
LY-3359-40
T603
LY-3308
T602
5642
5642
5642
D64 0A73
D65 SD-12
D62 HF-SD-1B
D63 FT-1N
D61 MA102
C606 5 150V
C602 100 15V
C603 6.5uF
C604 0.082 ±10%
C610 0.005
TLF-3704-1D(-2D)
TNP-1307-2
T34 2SB126 VERT. OUTPUT
T61 2SC41 HORIZ OUTPUT
T62 2SB126 A.F.C.
D34 PC02P11/2
VR32 2KB LINE
VR66 2MΩ
+85V
400V
-12.2V
-15.9V
GREEN
T601
PH905 22/1
C601 5000 20V
C616 0.1
C618 0.001
C617 0.001
R610 820K
2A DC
0.4A 117V AC
117VAC 60CPS

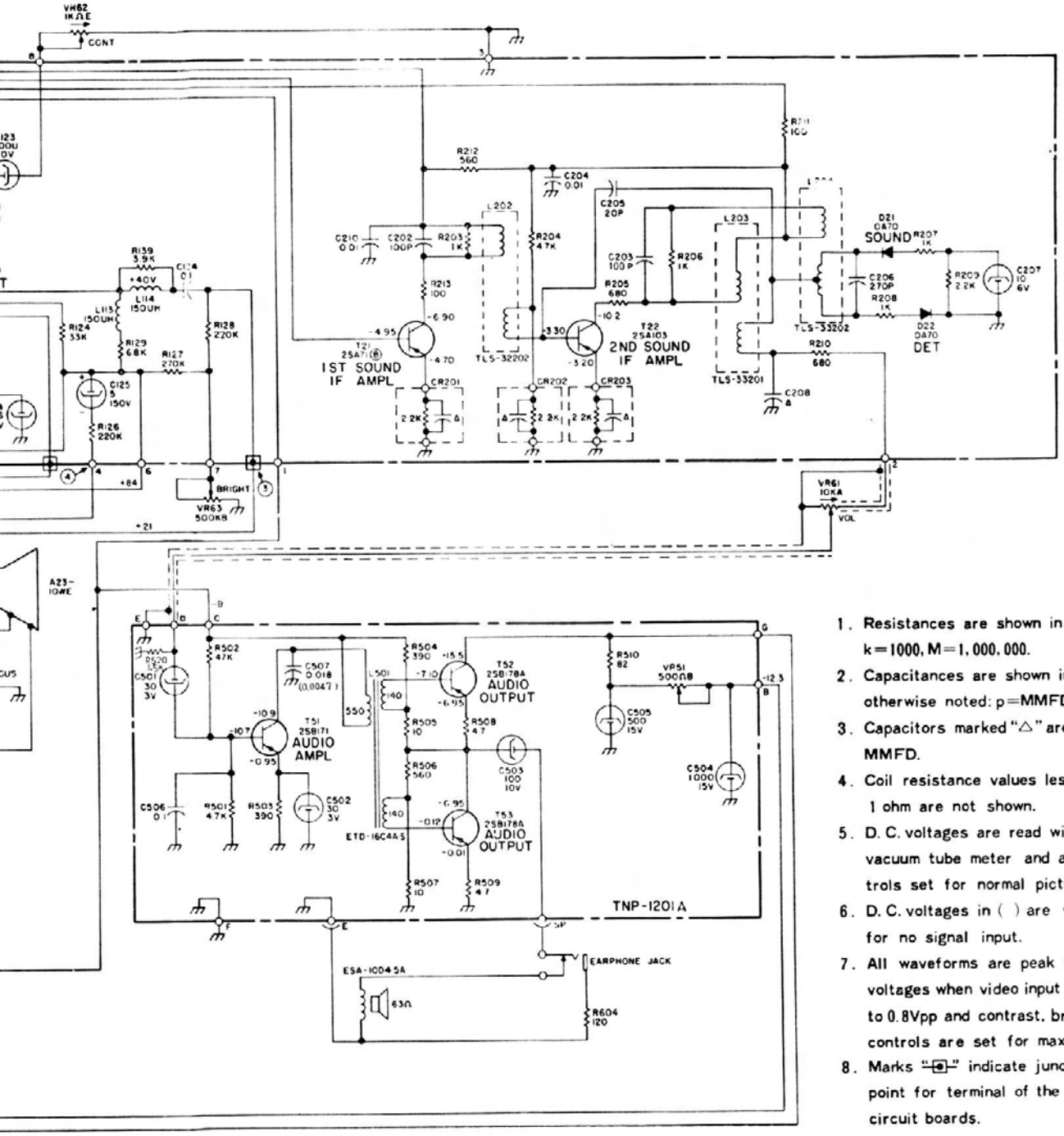

1. Resistances are shown in ohms: k=1000, M=1,000,000.
2. Capacitances are shown in MFD otherwise noted: p=MMFD.
3. Capacitors marked "△" are 10,000 MMFD.
4. Coil resistance values less than 1 ohm are not shown.
5. D.C. voltages are read with vacuum tube meter and all controls set for normal picture.
6. D.C. voltages in ( ) are values for no signal input.
7. All waveforms are peak to peak voltages when video input ② is set to 0.8Vpp and contrast, brightness controls are set for maxmum.
8. Marks "⊡" indicate junction point for terminal of the printed circuit boards.

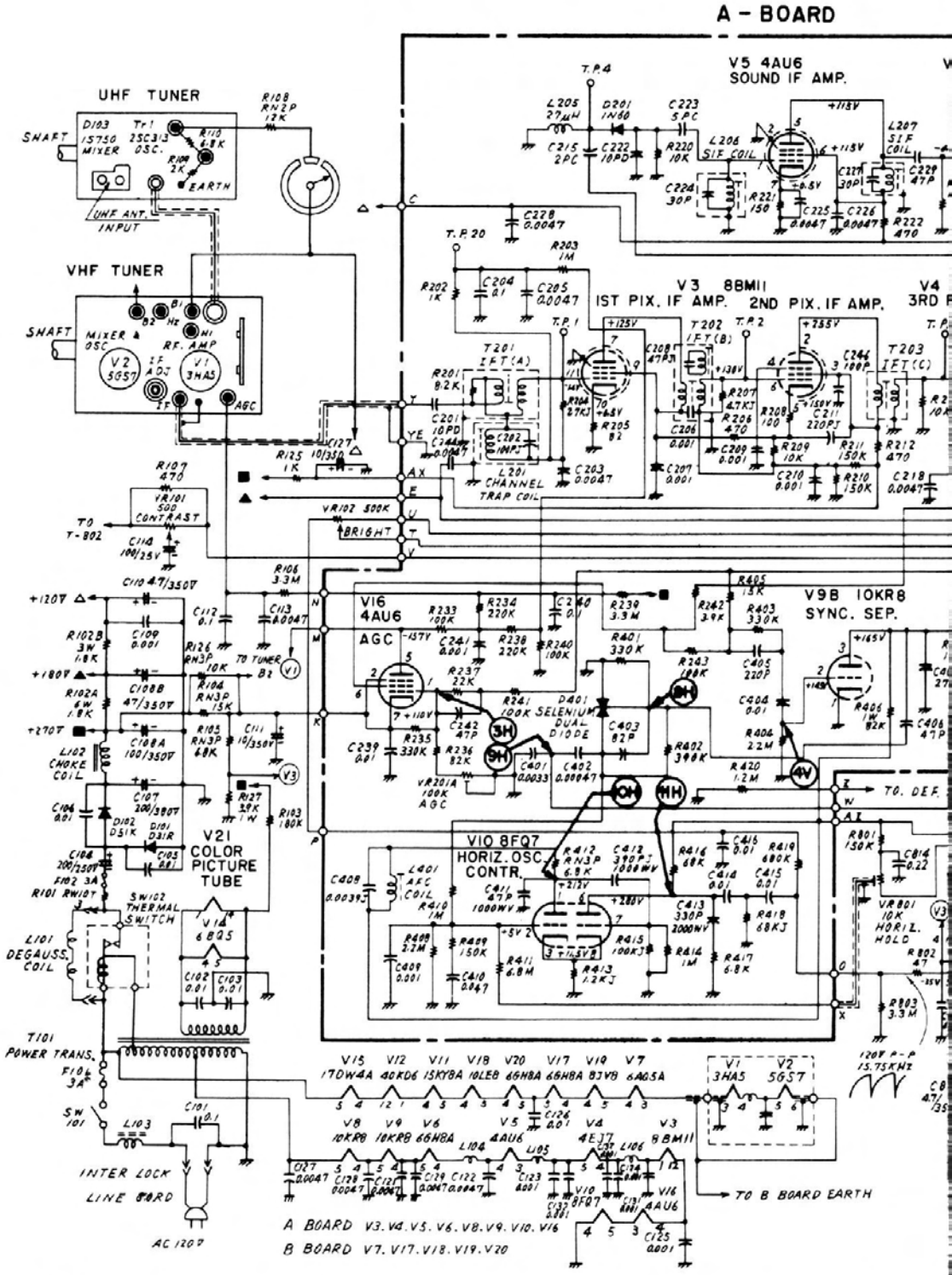

Panel H. Olympic Model CT-400 color TV. (Courtesy Olympic Div., Lear Sigler, Inc.)

1. ALL CAPACITANCE VALU
2. ALL RESISTANCE VALUES
3 VOLTAGES ARE MEASUR
& WITH NO SIGNAL IN

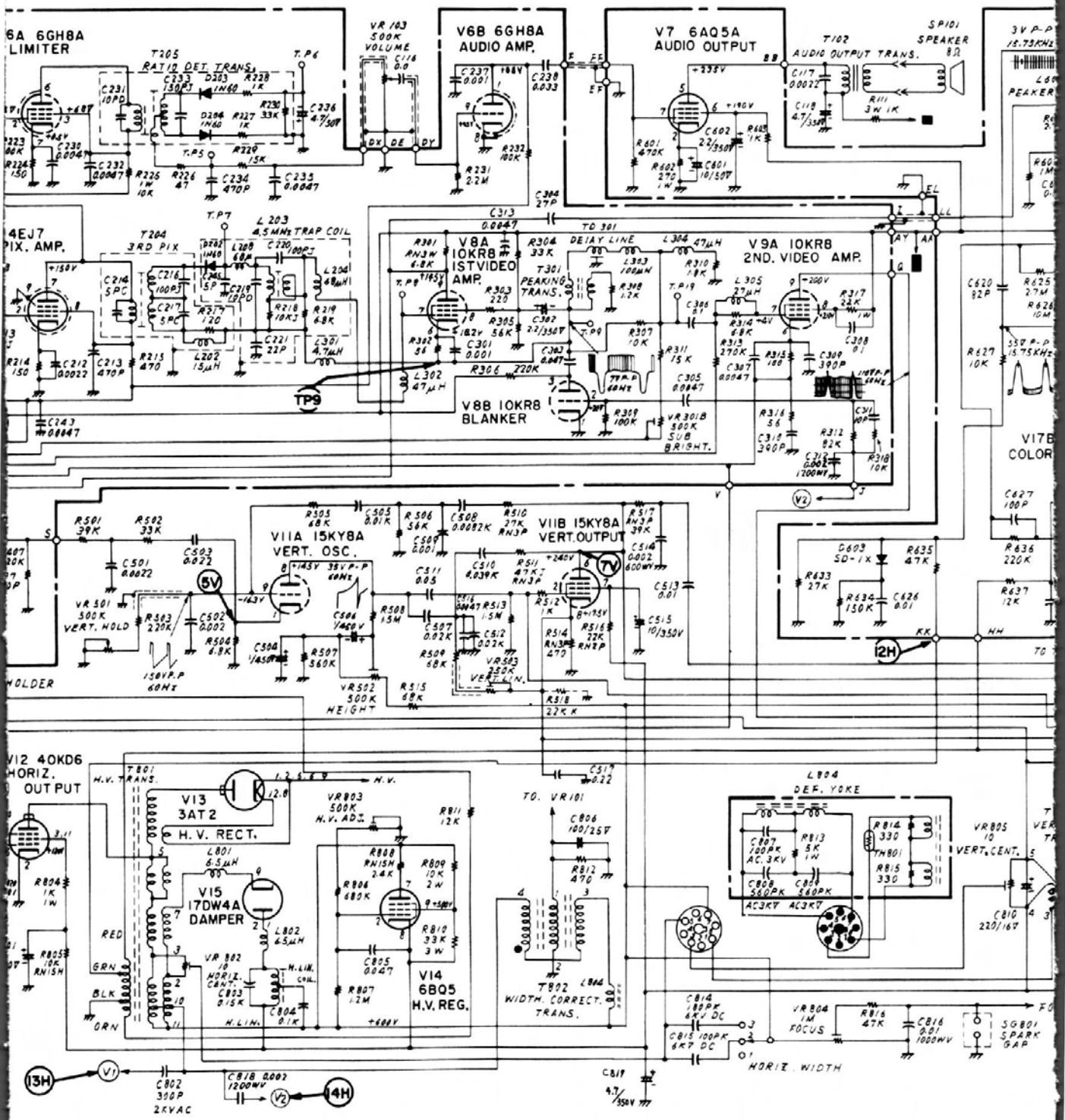

ES ARE IN "MF", BUT "P" MEANS "PF"

S ARE IN OHMS. K=1,000, M=1000,000.

ED TO CHASSIS GROUND WITH AN "ELECTRONIC VOLTMETER"

PUT AND SHOULD HOLD WITHIN ±20% WITH 120V. AC SUPPLY.

4. CAPACITANCE TOLERANCE: "C", "D", "J"

±0.25pF, ±0.5pF, ±5% AND ±10%

RESISTANCE TOLERANCE: "J" ME

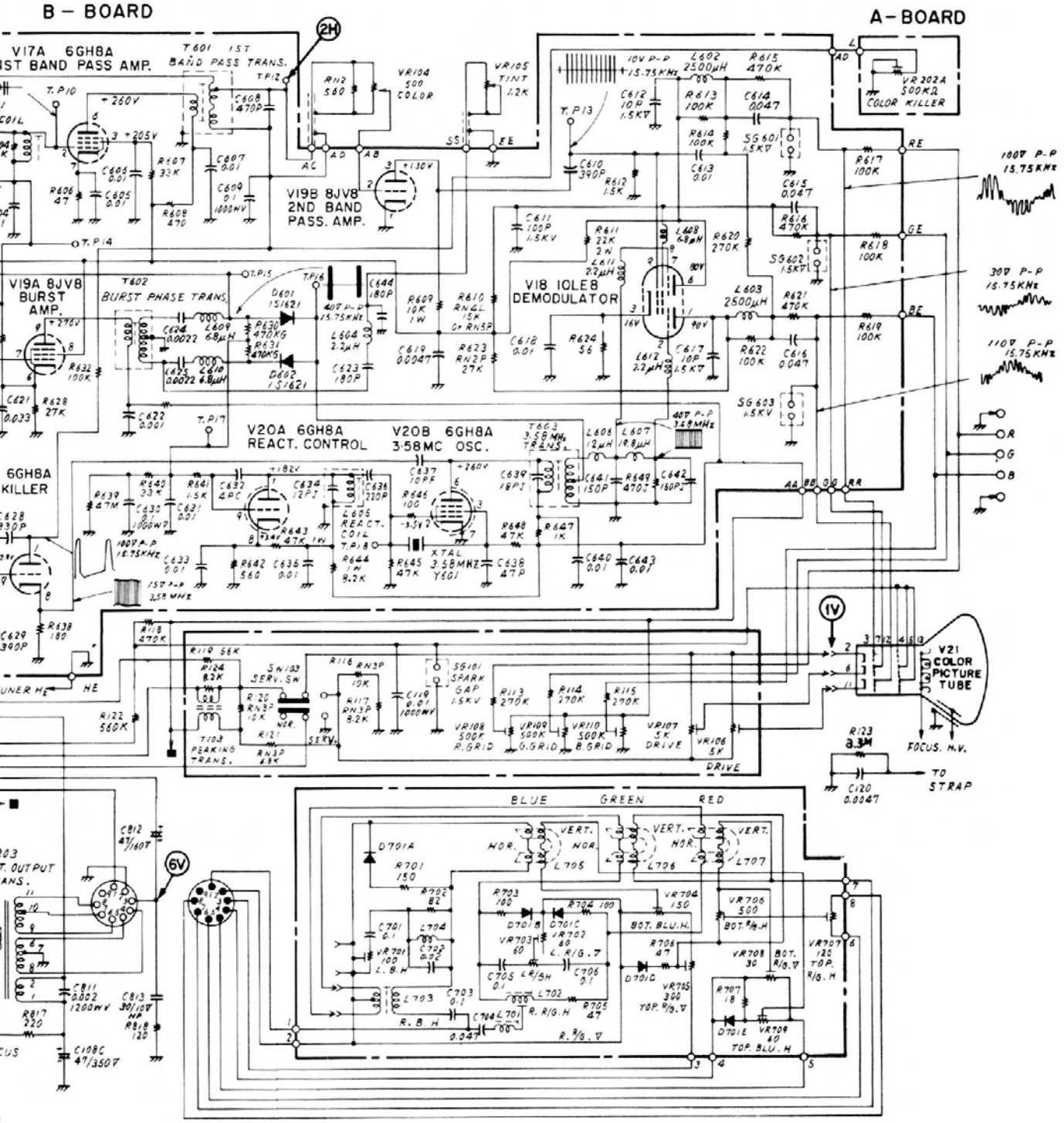
B – BOARD
A – BOARD
V17A 6GH8A
1ST BAND PASS AMP.
T601 1ST BAND PASS TRANS.
V19B 8JV8
2ND BAND PASS. AMP.
V19A 8JV8
BURST AMP.
T602 BURST PHASE TRANS.
V18 10LE8
DEMODULATOR
V20A 6GH8A
REACT. CONTROL
V20B 6GH8A
3.58MC OSC.
VR202A 500KΩ
COLOR KILLER
V21
COLOR PICTURE TUBE
FOCUS. H.V.
TO STRAP
BLUE
GREEN
RED
HOR.
VERT.
BOT. BLU. H
BOT. R/G. H
BOT. R/G. V
TOP. R/G. V
TOP. BLU. H
R. B. H
R. R/G. H
R. R/G. V
L. R/G. V
L. B. H
L. R/G. H
L. R/G. V
AND "K" MEAN
SPECTIVELY.
NS ± 5%

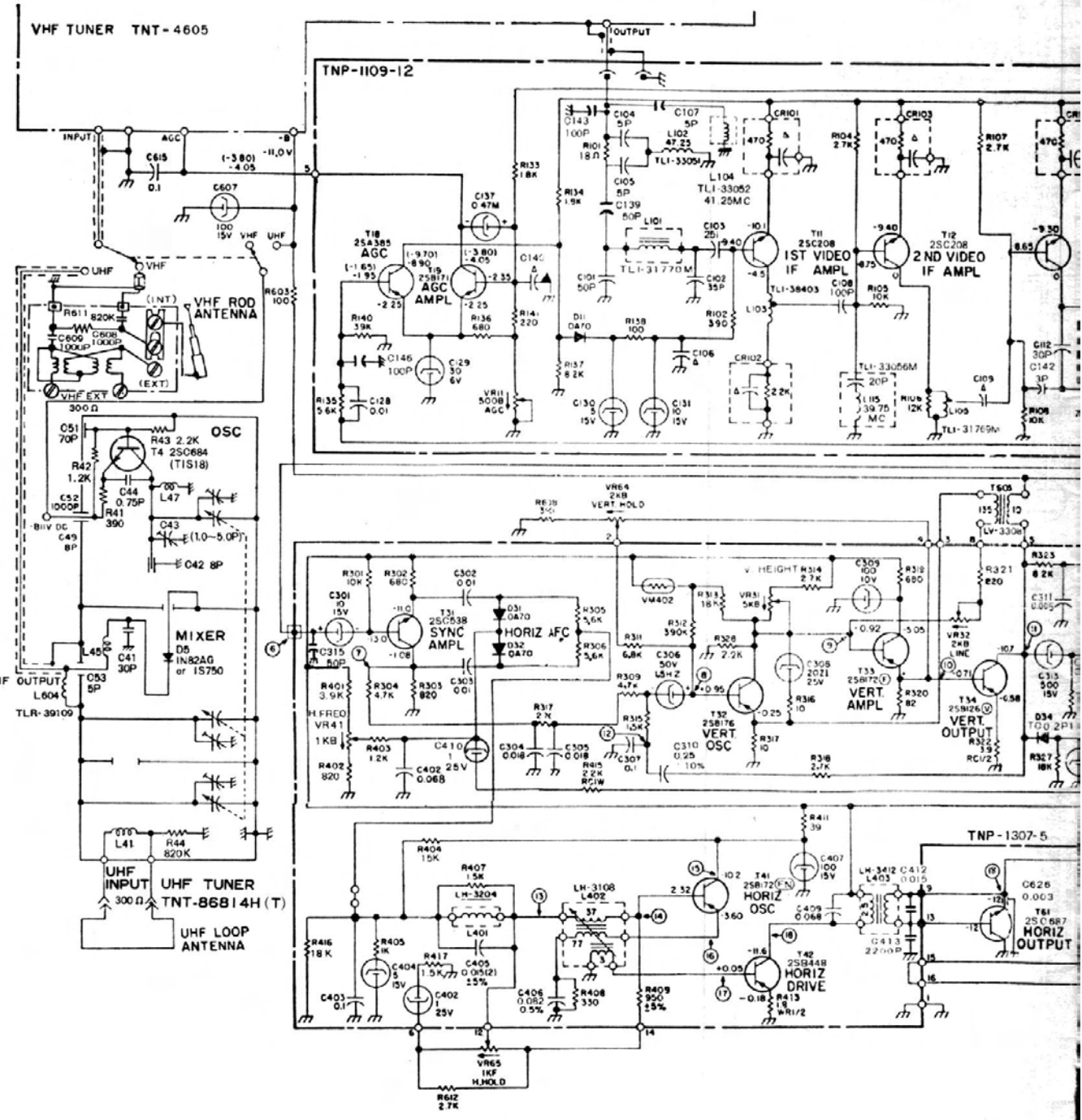
VHF TUNER TNT-4605
TNP-1109-12
OUTPUT
INPUT
AGC
VHF
UHF
VHF ROD ANTENNA
VHF EXT
300 Ω
OSC
MIXER
IF OUTPUT
TLR-39109
UHF INPUT
UHF TUNER TNT-86814H (T)
UHF LOOP ANTENNA
T18 2SA385 AGC
T19 2SB171 AGC AMPL
T11 2SC208 1ST VIDEO IF AMPL
T12 2SC208 2ND VIDEO IF AMPL
T31 2SC538 SYNC AMPL
HORIZ AFC
T32 2SB176 VERT OSC
T33 2SB172 VERT AMPL
T34 2SB126 VERT OUTPUT
T41 2SB172 HORIZ OSC
T42 2SB448 HORIZ DRIVE
T61 2SC687 HORIZ OUTPUT
TNP-1307-5
VR64 2KB VERT HOLD
VR65 1KF H.HOLD
H.FREQ VR41 1KB
V. HEIGHT
VR32 2KB LINE
LH-3204
LH-3108 L402
LH-3412 L403
TLI-33051
TLI-31770M
TLI-33052 41.25MC
TLI-38403
TLI-33056M
TLI-31769M
TLR-39109

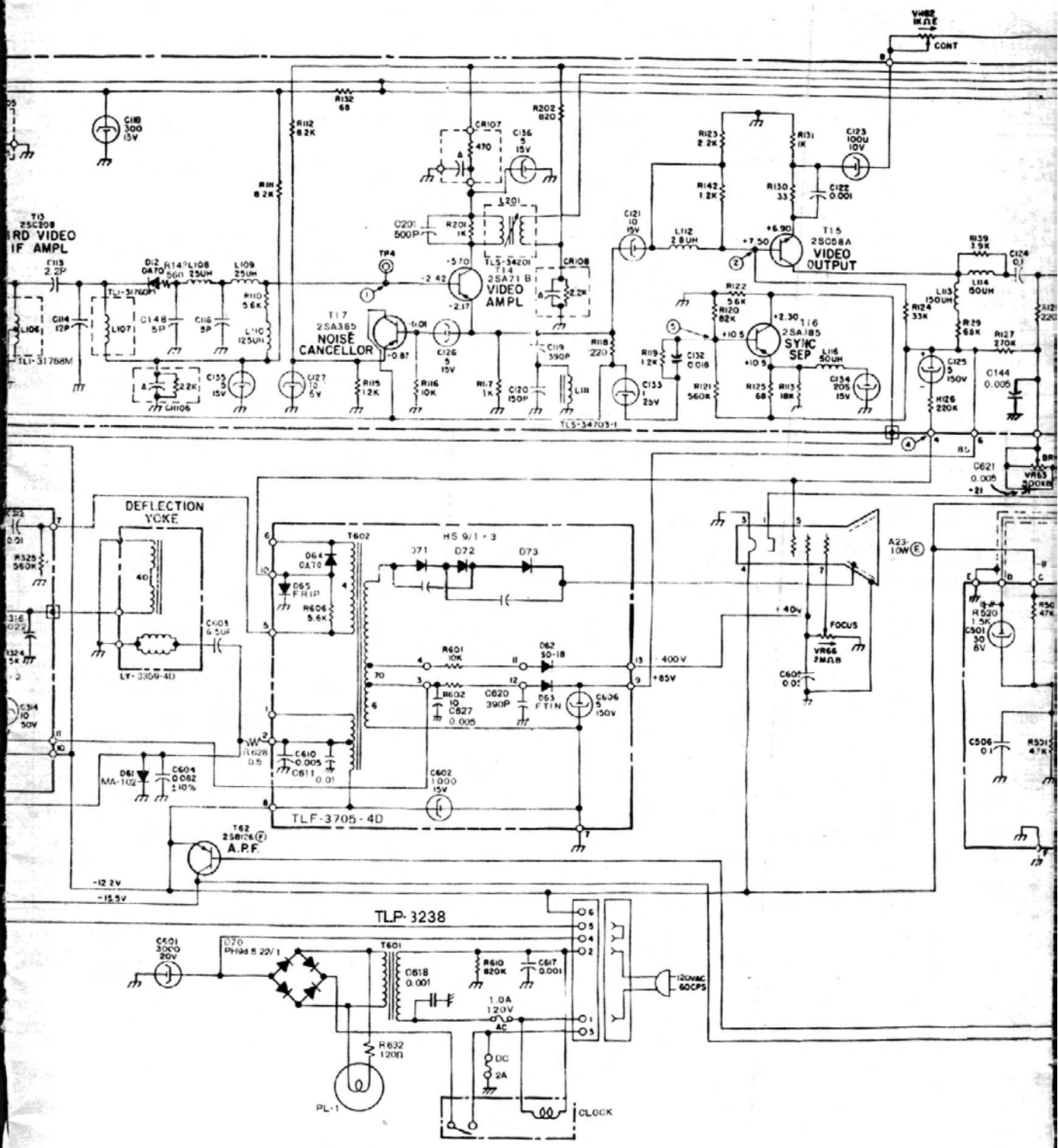

VR62 1KΩE
CONT
T13 2SC208
3RD VIDEO IF AMPL
T14 2SA71 B
VIDEO AMPL
T15 2SC58A
VIDEO OUTPUT
T16 2SA385
SYNC SEP
T17 2SA385
NOISE CANCELLOR
TLS-34201
TLS-34703-1
TLI-31760M
TLI-31768M
DEFLECTION YOKE
LY-3359-4D
HS 9/1 × 3
TLF-3705-4D
T62 2SB126
A.P.F.
FOCUS
VR66 2MΩB
A23-10W
TLP-3238
120VAC 60CPS
CLOCK
PL-1

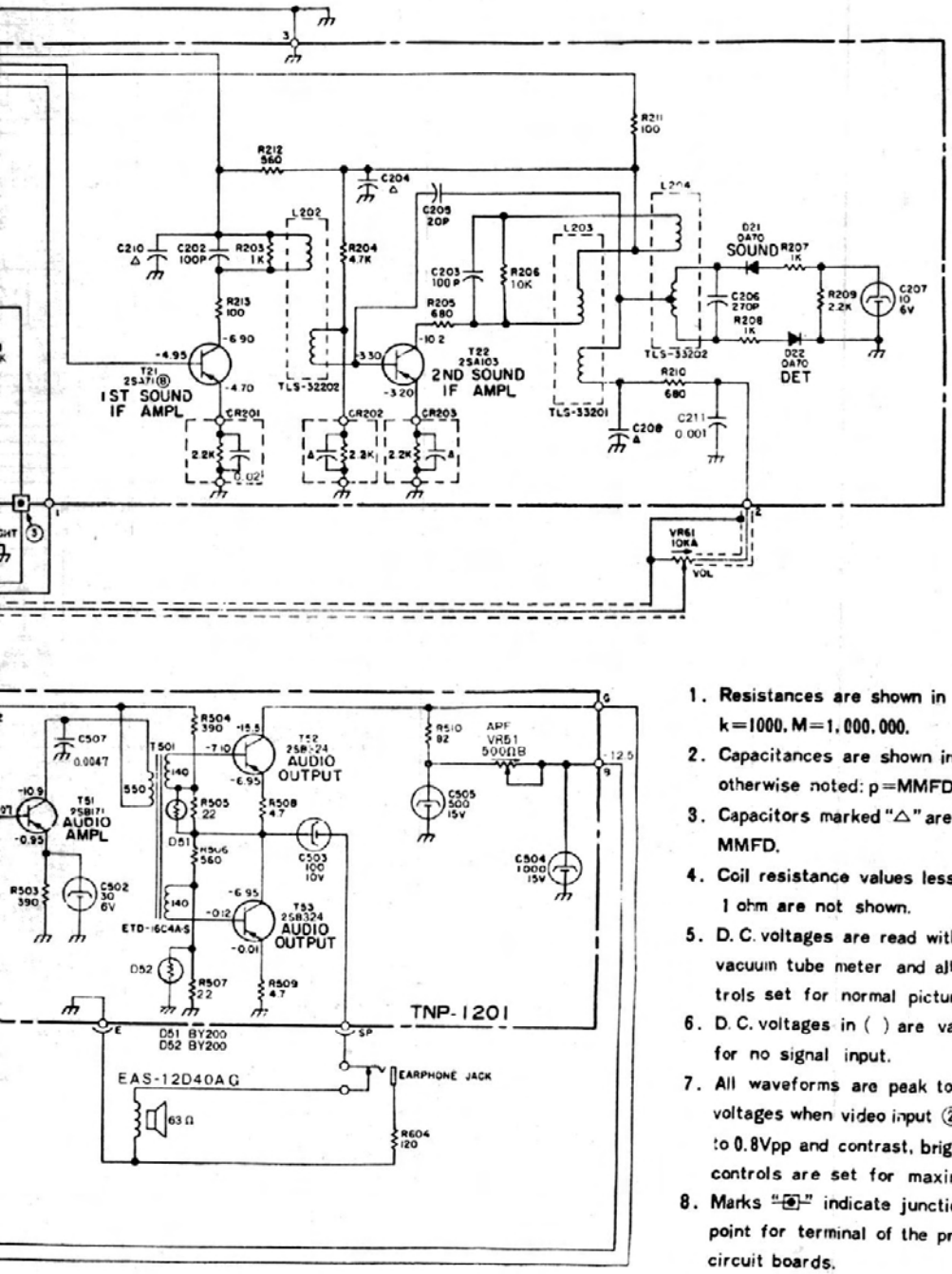

1. Resistances are shown in ohms: k=1000, M=1,000,000.
2. Capacitances are shown in MFD otherwise noted: p=MMFD.
3. Capacitors marked "△" are 10,000 MMFD.
4. Coil resistance values less than 1 ohm are not shown.
5. D. C. voltages are read with vacuum tube meter and all controls set for normal picture.
6. D. C. voltages in ( ) are values for no signal input.
7. All waveforms are peak to peak voltages when video input ② is set to 0.8Vpp and contrast, brightness controls are set for maximum.
8. Marks "⊙" indicate junction point for terminal of the printed circuit boards.

Panel G. Penncrest Model 1318-48 portable TV (made by Matsushita Electric Corp. of America). (Courtesy J. C. Penney Co.)

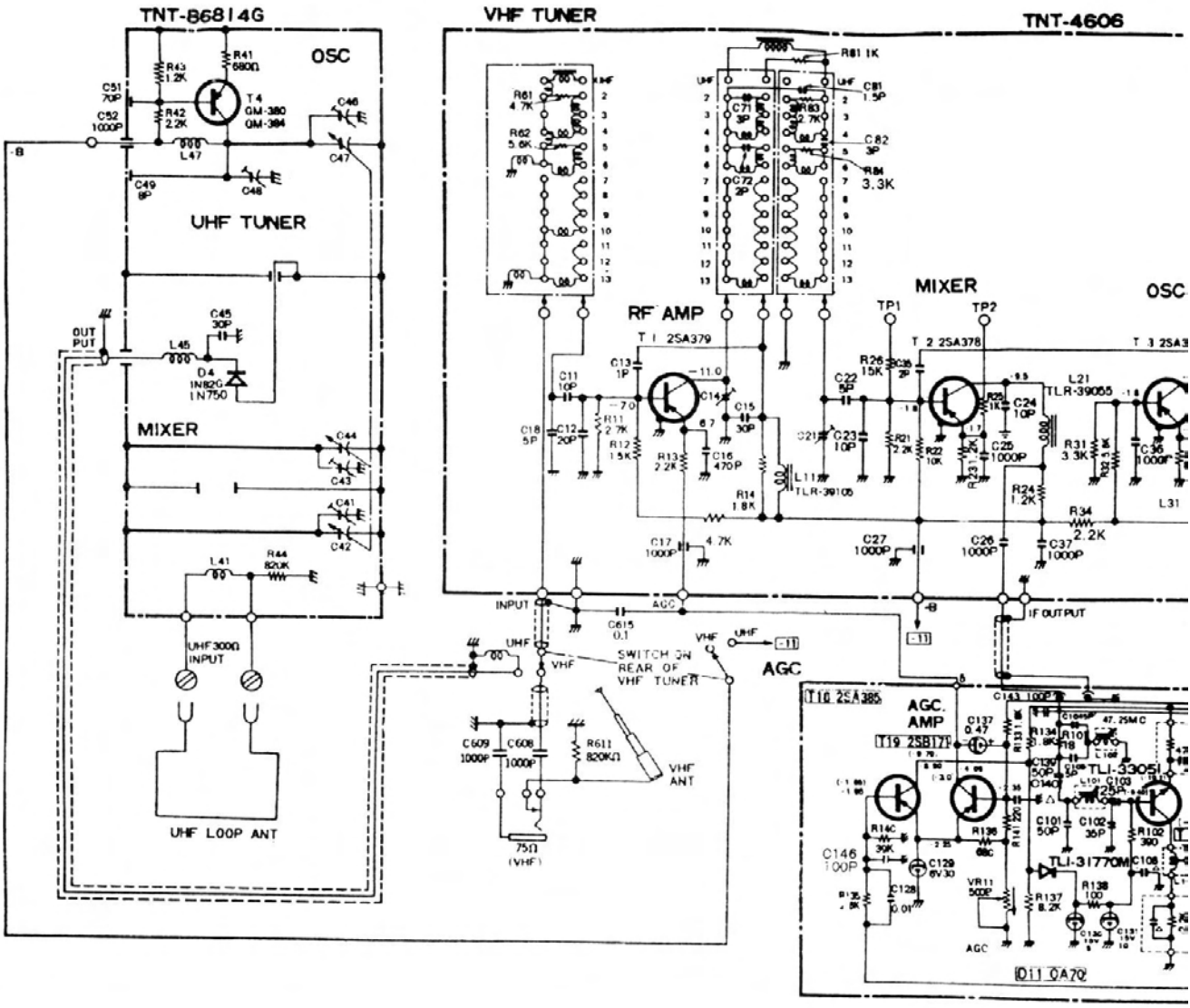

1. Resistances are shown in ohms: k=1000, M=1,000,000.
2. Capacitances are shown in MFD otherwise noted: p=MMFD.
3. Capacitors marked "△" are 10.000 MMFD.
4. Coil resistance values less than 1 ohm are not shown.
5. D. C. voltages are read with vacuum tube meter and all controls set for normal picture.
6. D. C. voltages in ( ) are values for no signal input.
7. All waveforms are peak to peak voltages when video input ② is set to 0.8Vpp and contrast, brightness controls are set for maximum.
8. Marks "⊕" indicate junction point for terminal of the printed circuit boards.

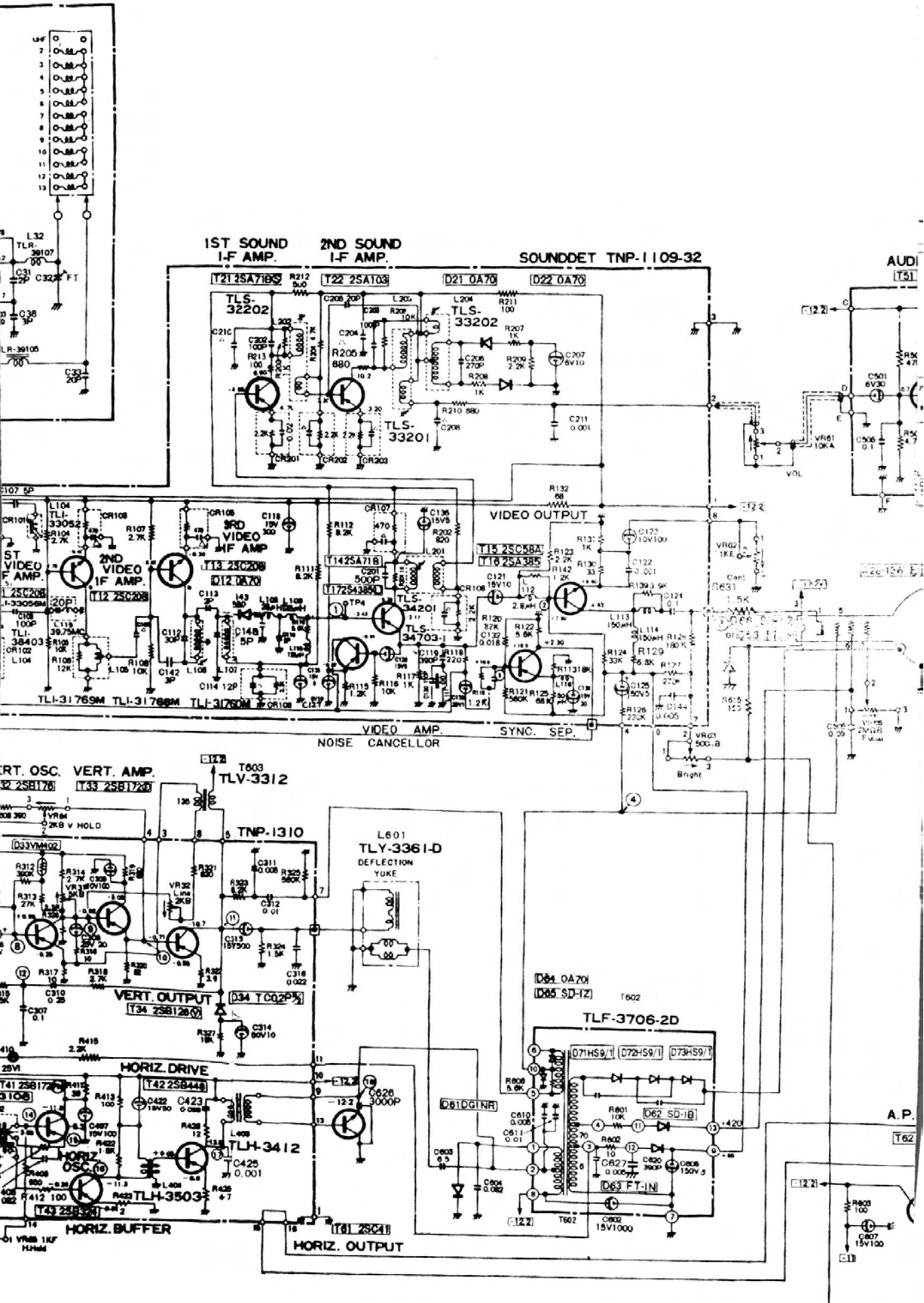

1ST SOUND I-F AMP.
2ND SOUND I-F AMP.
SOUNDDET TNP-1109-32
TLS-32202
TLS-33202
TLS-33201
VIDEO OUTPUT
3RD VIDEO IF AMP
2ND VIDEO IF AMP.
TLS-34201
TLS-34703-1
TLI-31769M
TLI-31768M
TLI-31760M
VIDEO AMP.
SYNC. SEP.
NOISE CANCELLOR
VERT. OSC.
VERT. AMP.
TLV-3312
TNP-1310
L601
TLY-3361-D
DEFLECTION YOKE
VERT. OUTPUT
HORIZ. DRIVE
TLH-3412
TLH-3503
HORIZ. BUFFER
HORIZ. OUTPUT
TLF-3706-2D
A.P.

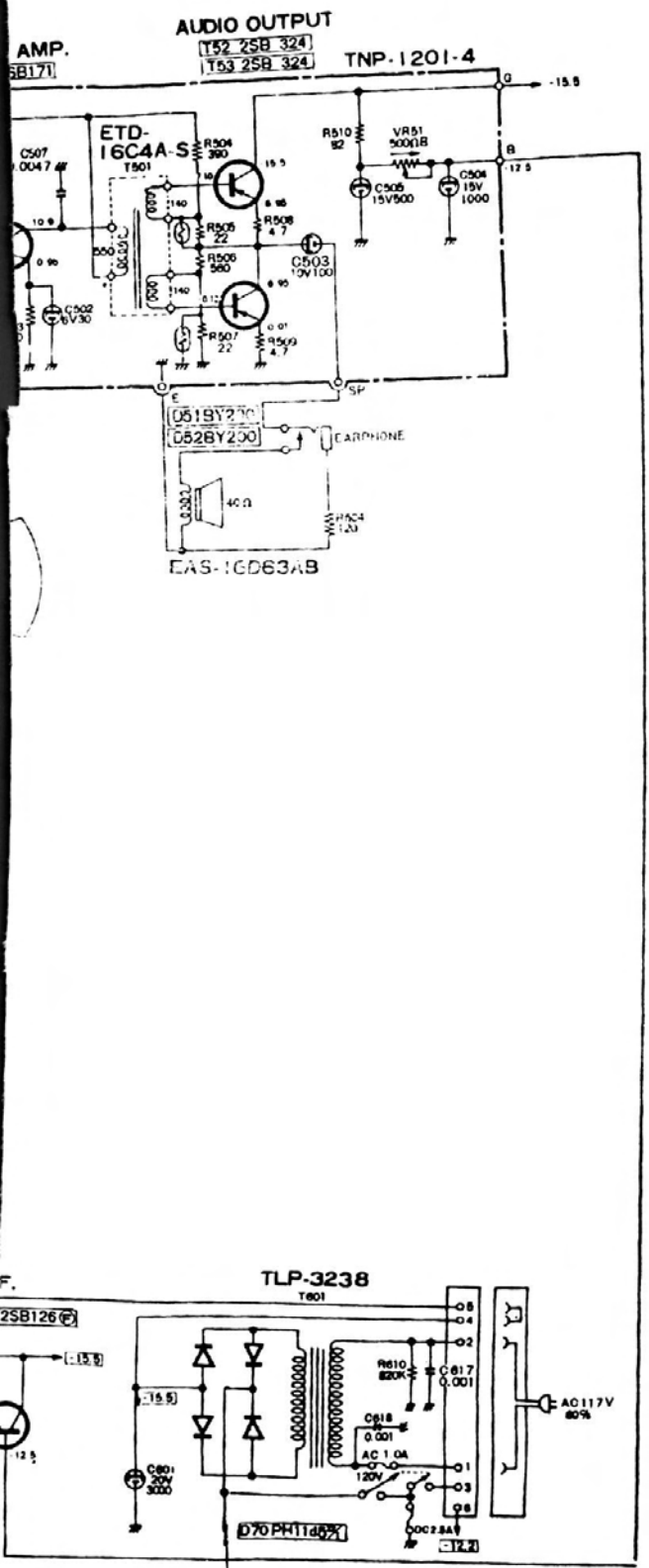

Panel E. Panasonic Model TR-110 TV. (Courtesy Matsushita Electric Corp. of America)

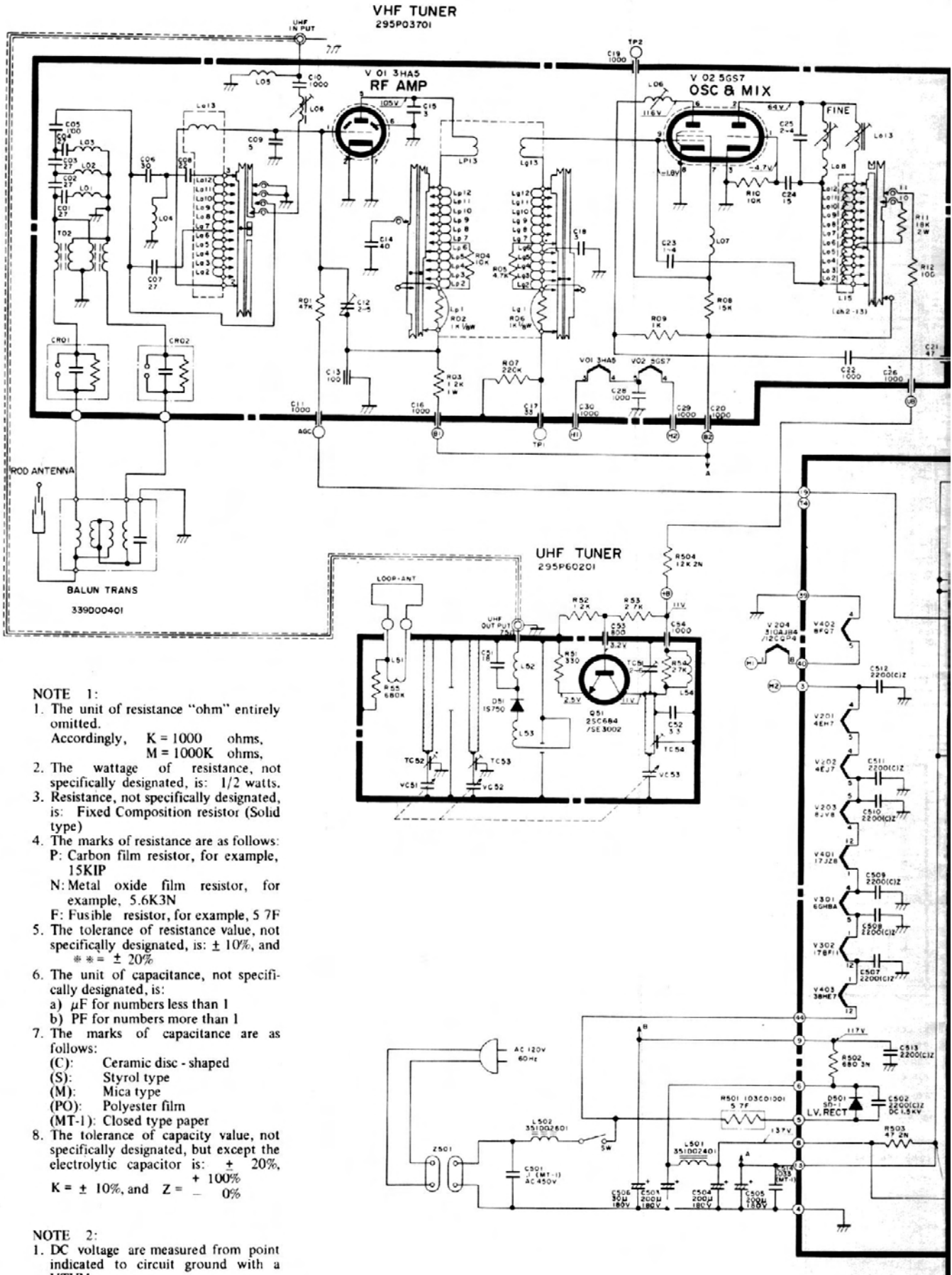

NOTE 1:

1. The unit of resistance "ohm" entirely omitted.
   Accordingly, K = 1000 ohms,
   M = 1000K ohms,
2. The wattage of resistance, not specifically designated, is: 1/2 watts.
3. Resistance, not specifically designated, is: Fixed Composition resistor (Solid type)
4. The marks of resistance are as follows:
   P: Carbon film resistor, for example, 15KIP
   N: Metal oxide film resistor, for example, 5.6K3N
   F: Fusible resistor, for example, 5 7F
5. The tolerance of resistance value, not specifically designated, is: ± 10%, and * * = ± 20%
6. The unit of capacitance, not specifically designated, is:
   a) μF for numbers less than 1
   b) PF for numbers more than 1
7. The marks of capacitance are as follows:
   (C): Ceramic disc - shaped
   (S): Styrol type
   (M): Mica type
   (PO): Polyester film
   (MT-1): Closed type paper
8. The tolerance of capacity value, not specifically designated, but except the electrolytic capacitor is: ± 20%, K = ± 10%, and Z = $^{+100\%}_{-0\%}$

NOTE 2:

1. DC voltage are measured from point indicated to circuit ground with a VTVM.
   Line voltage at 120V AC no signal applied.
2. Waveform were taken with controls set for a normal picture.

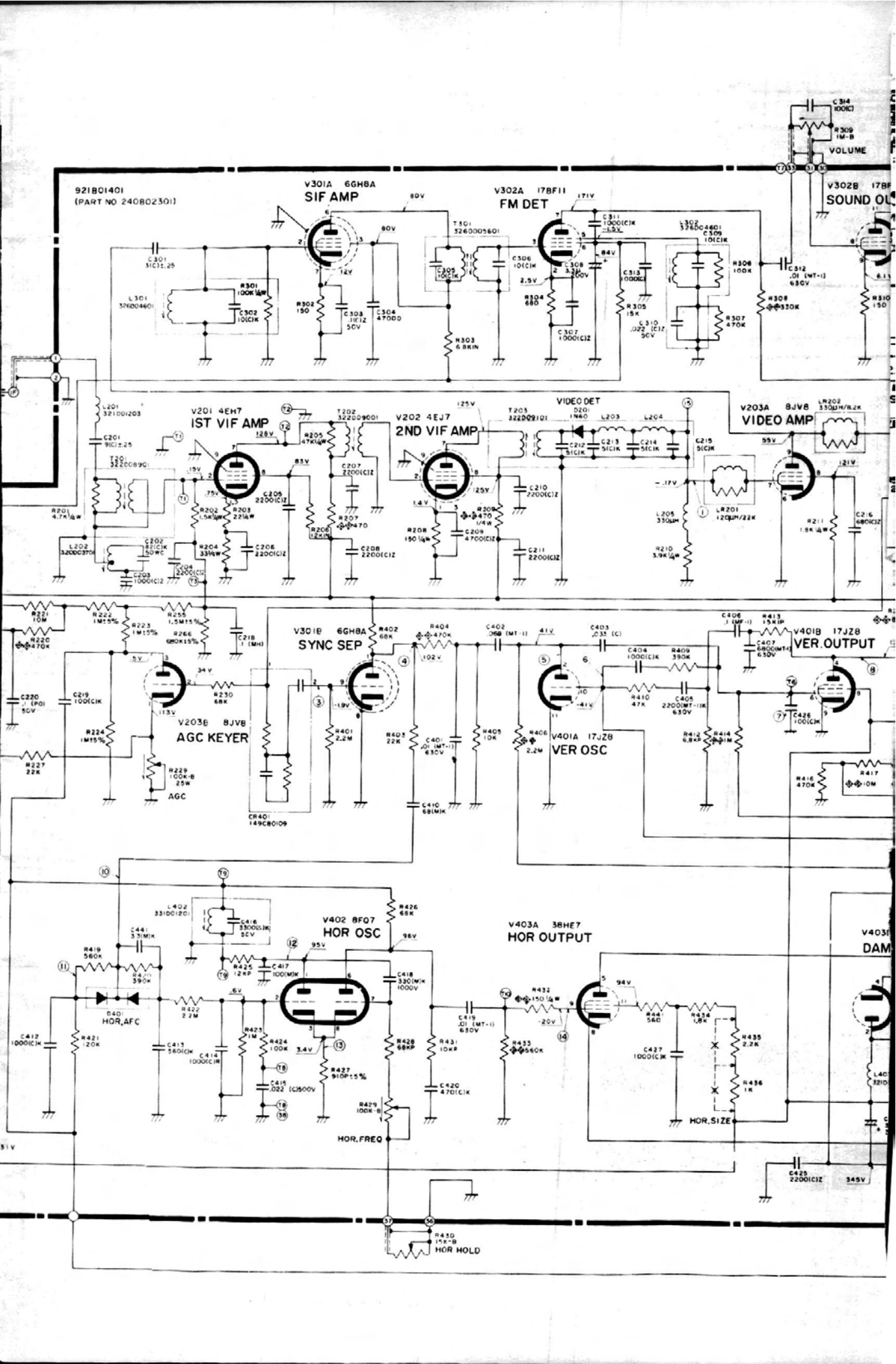
921801401
(PART NO 24080230I)
V301A 6GH8A
SIF AMP
V302A 17BF11
FM DET
V302B 17BF
SOUND OU
VOLUME
V201 4EH7
IST VIF AMP
V202 4EJ7
2ND VIF AMP
VIDEO DET
V203A 8JV8
VIDEO AMP
V301B 6GH8A
SYNC SEP
V203B 8JV8
AGC KEYER
AGC
V401B 17JZ8
VER.OUTPUT
V401A 17JZ8
VER OSC
V402 8FQ7
HOR OSC
V403A 38HE7
HOR OUTPUT
D401
HOR.AFC
HOR.FREQ
HOR.SIZE
HOR HOLD
CR401
149C80109

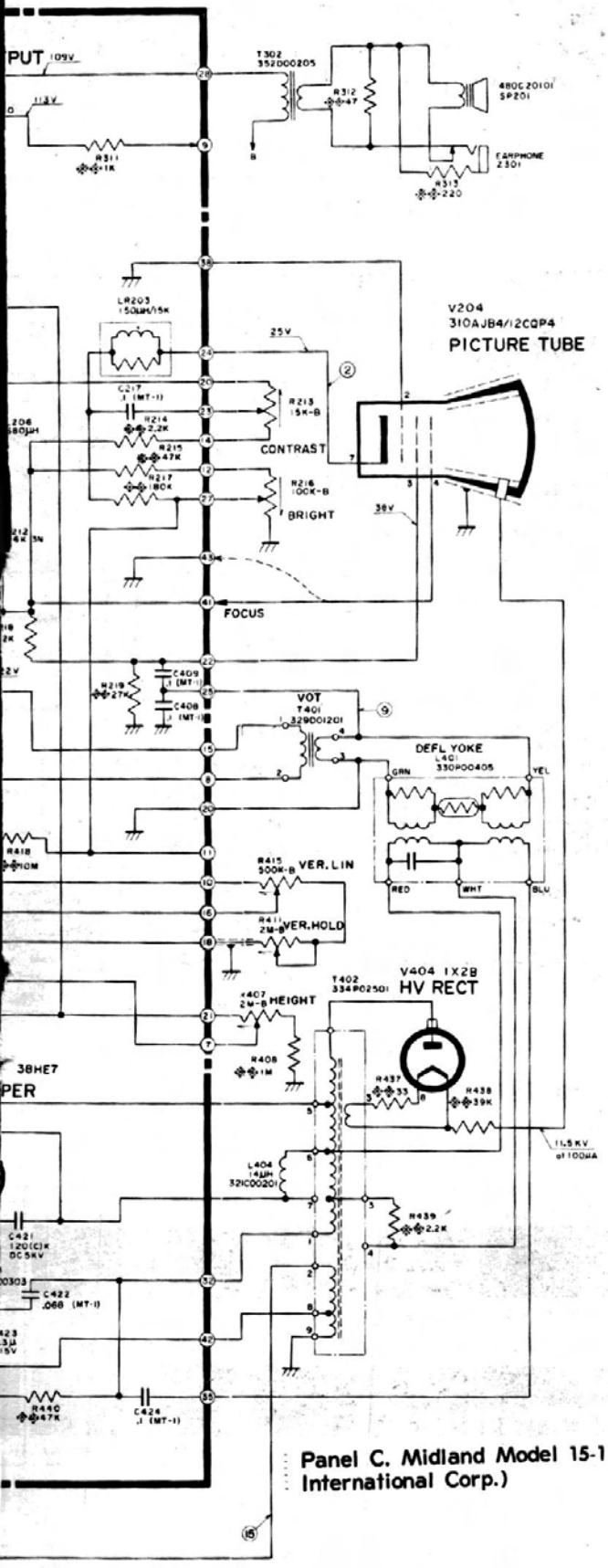

Panel C. Midland Model 15-114 portable TV. (Courtesy Midland International Corp.)

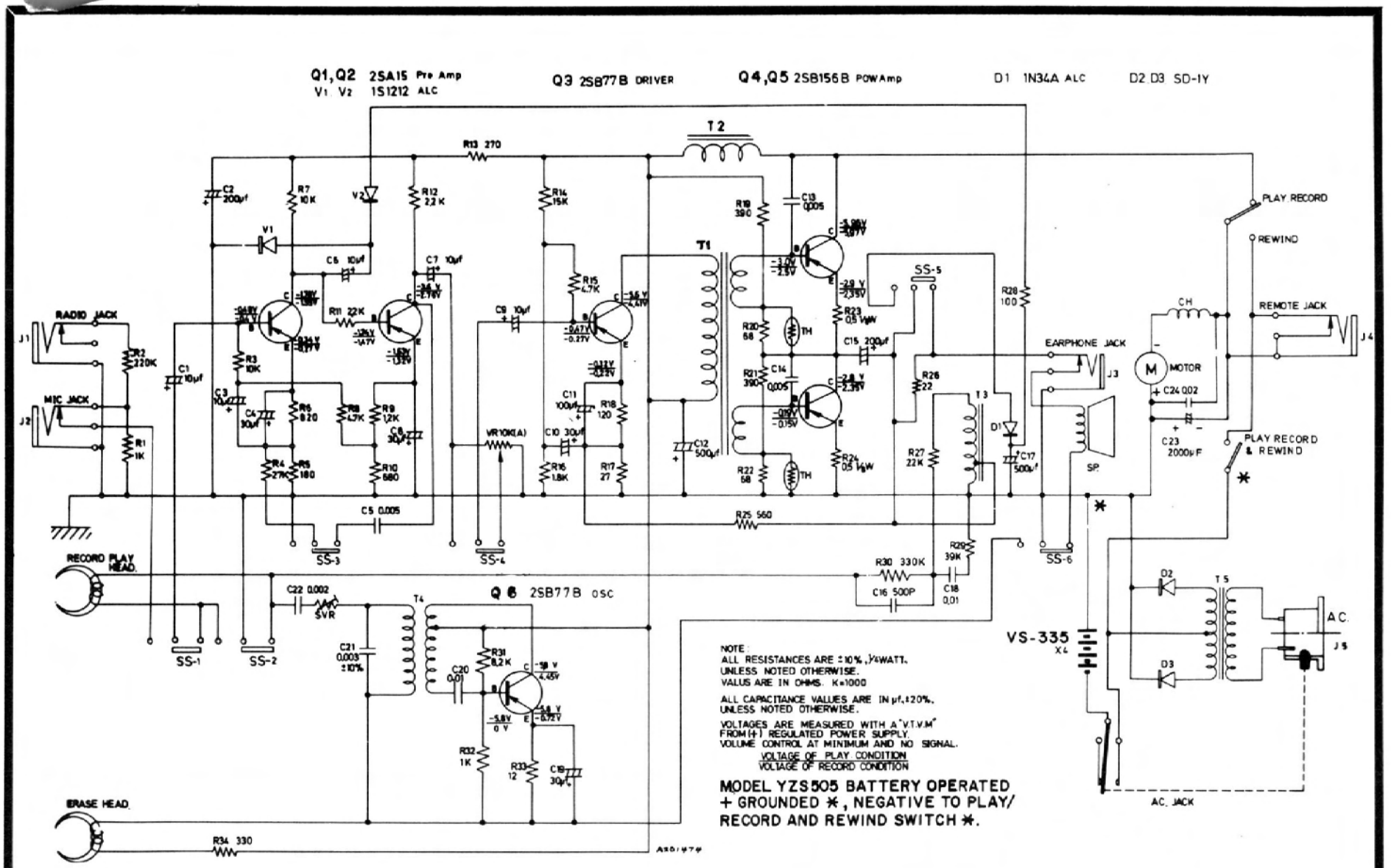

Fig. 5-54. RCA Model YYS510, YZS505, 510 series tape recorder. (Courtesy RCA)

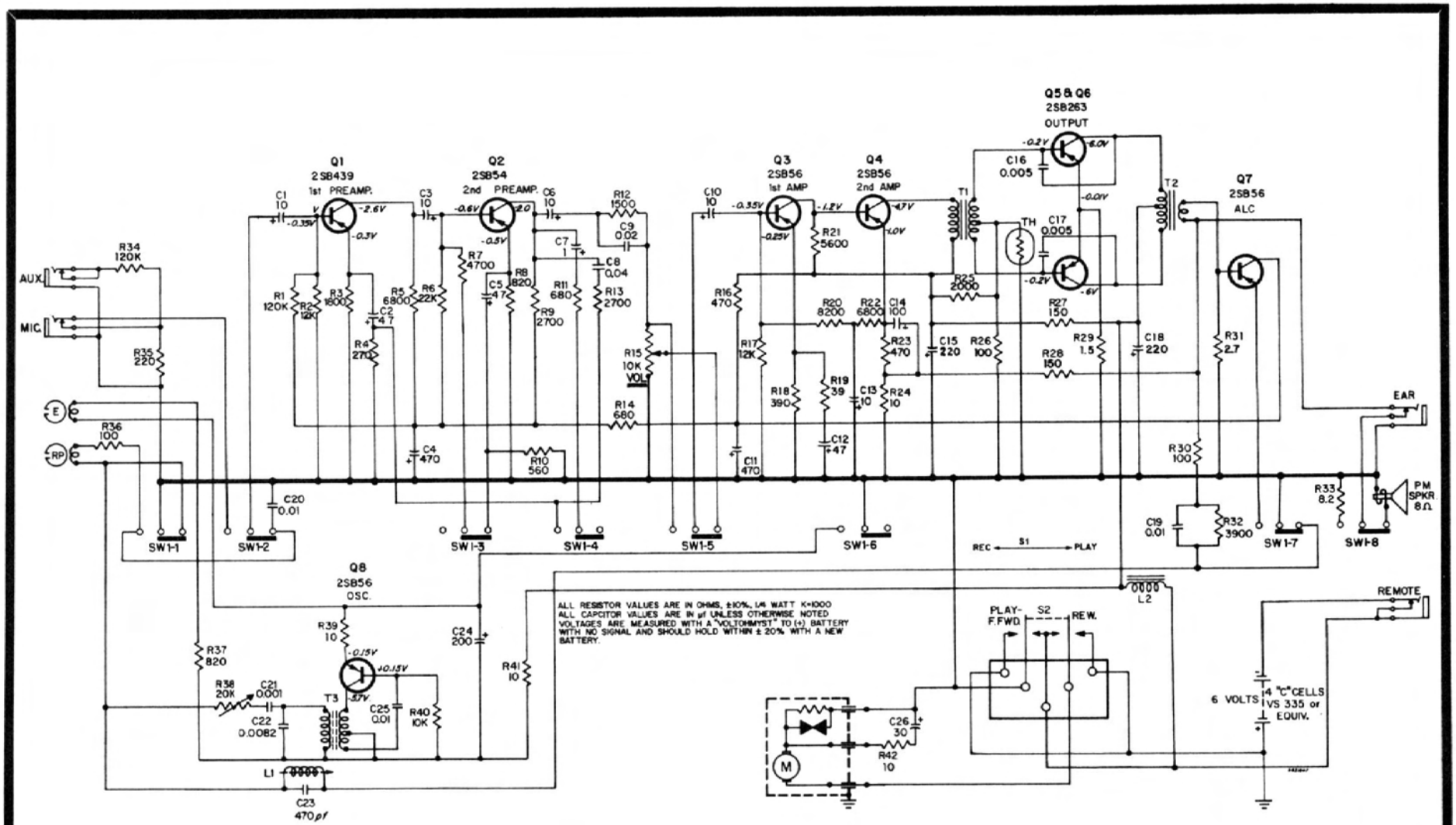

Fig. 5-55. RCA Model YZB515 tape recorder. (Courtesy RCA)

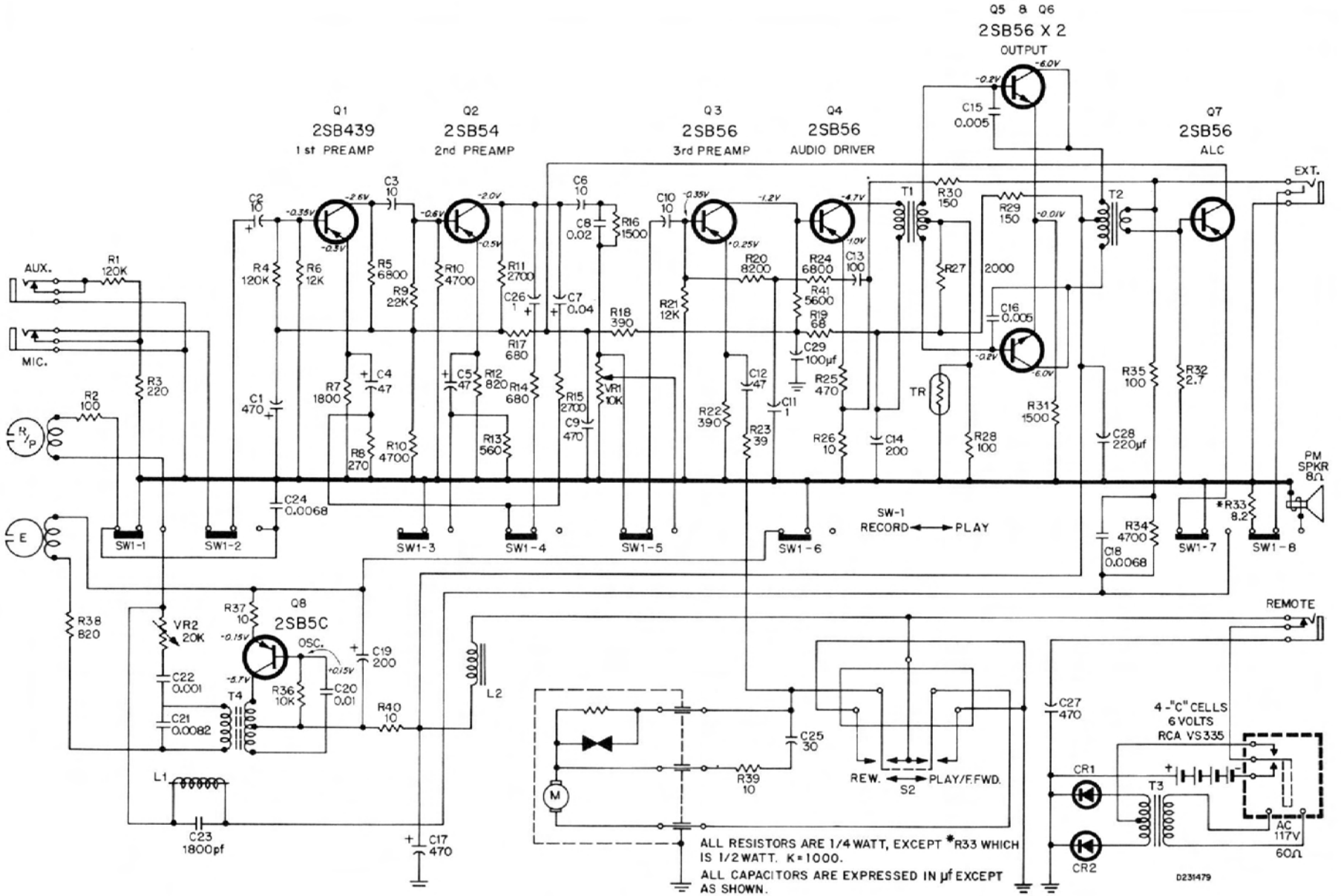

Fig. 5-56. RCA Model YZB525 tape recorder. (Courtesy RCA)

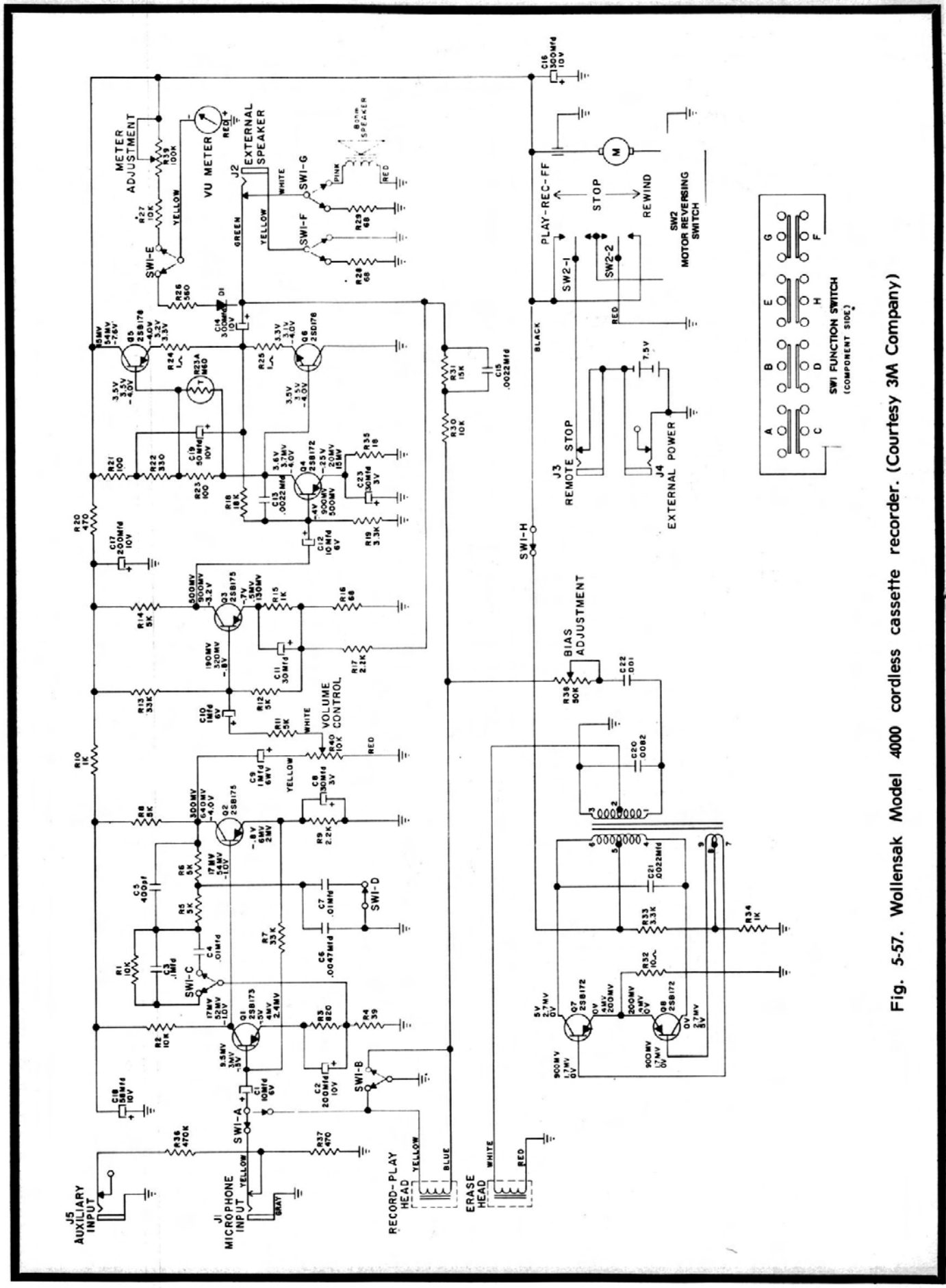

Fig. 5-57. Wollensak Model 4000 cordless cassette recorder. (Courtesy 3M Company)

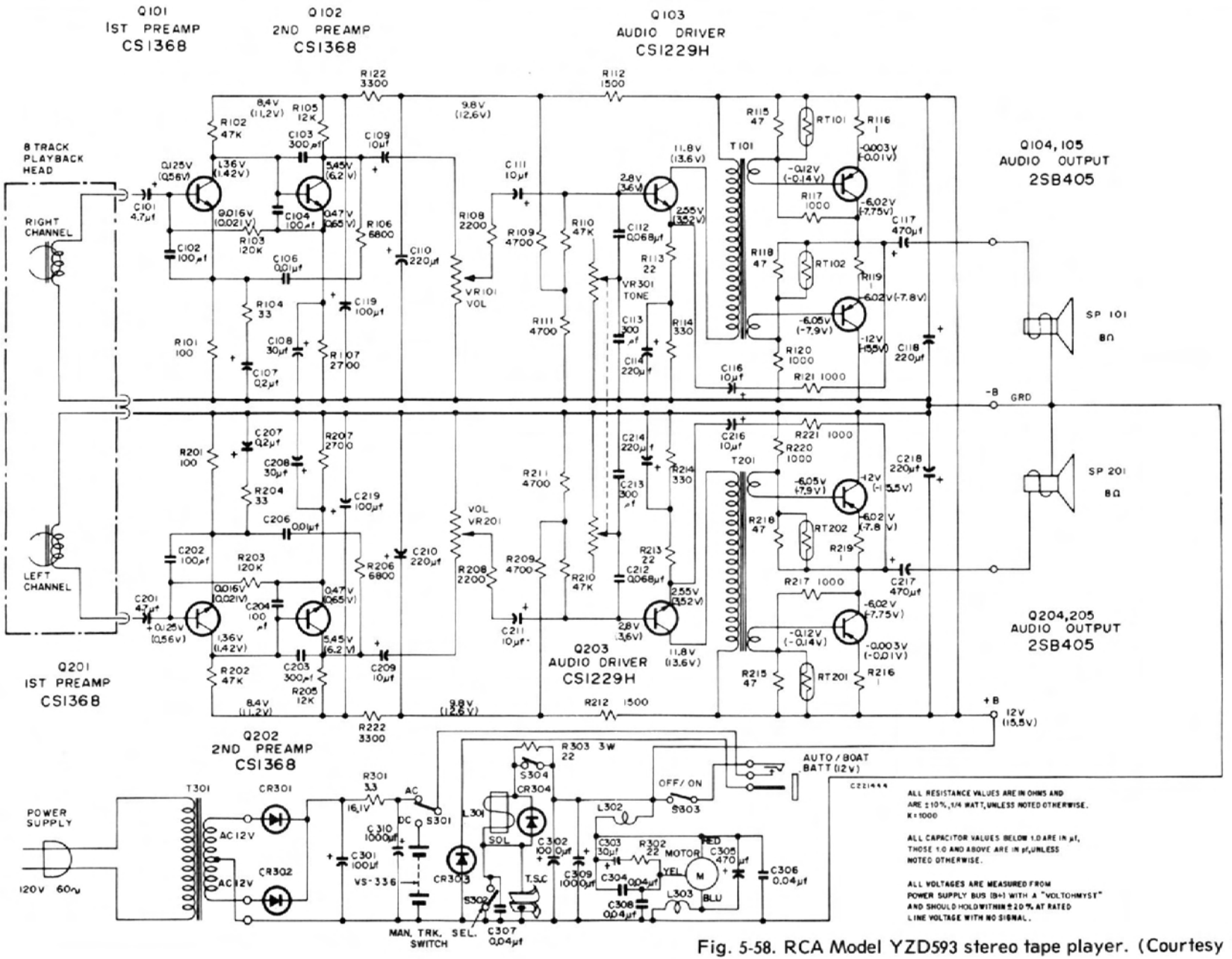

Fig. 5-58. RCA Model YZD593 stereo tape player. (Courtesy RCA)

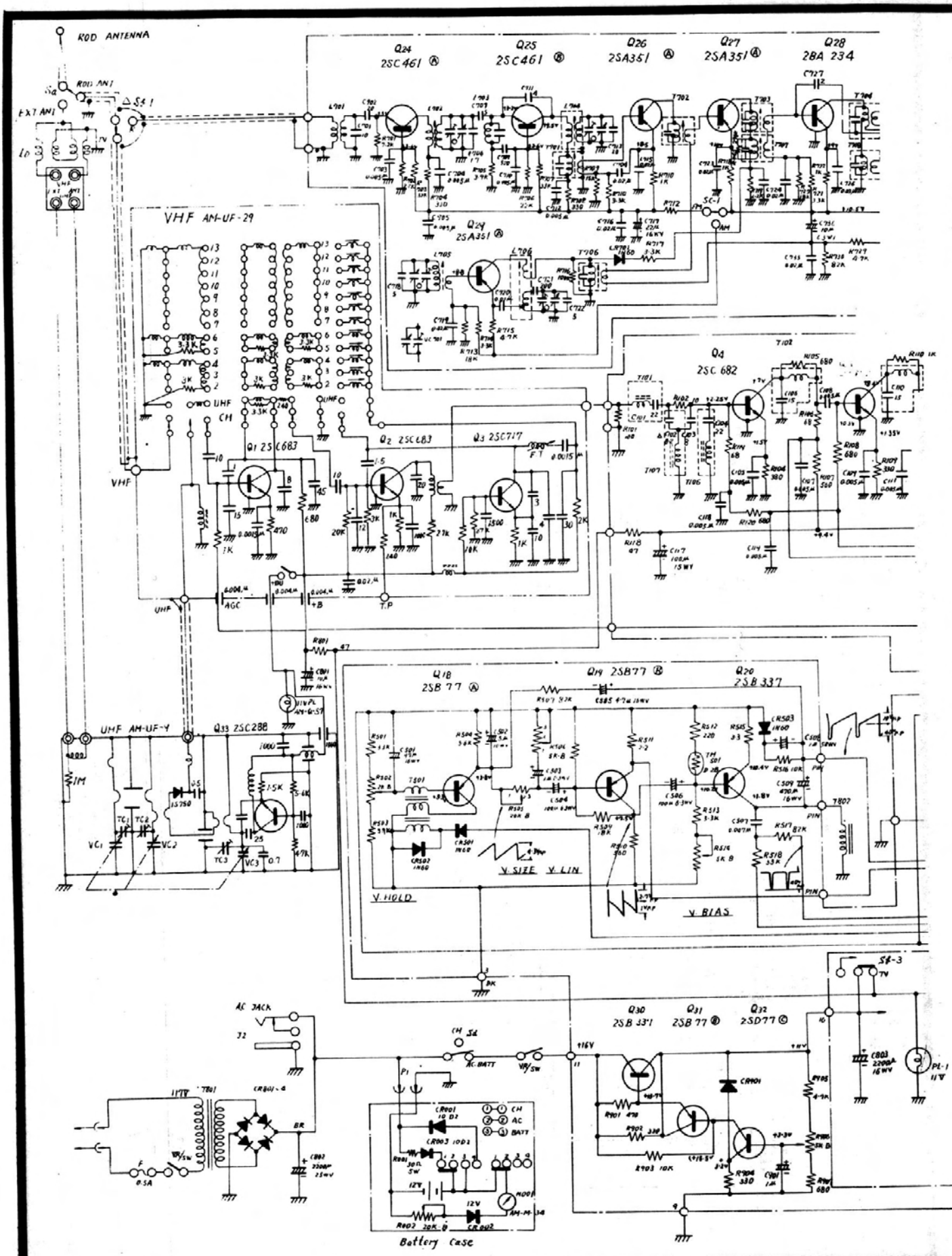
ROD ANTENNA
ROD ANT
EXT ANT
SS 1
Q24 2SC461 Ⓐ
Q25 2SC461 Ⓑ
Q26 2SA351 Ⓐ
Q27 2SA351 Ⓐ
Q28 2BA 234
VHF AM-UF-29
Q29 2SA351 Ⓐ
VHF
UHF
CH
Q1 2SC683
Q2 2SC683
Q3 2SC717
Q4 2SC 682
AGC
+B
T.P
UHF AM-UF-4
Q33 2SC288
Q18 2SB 77 Ⓐ
Q19 2SB77 Ⓑ
Q20 2SB 337
V. SIZE
V. LIN
V. HOLD
V. BIAS
AC JACK
CH SW
AC-BATT
VR/SW
Q30 2SB 331
Q31 2SB 77 Ⓑ
Q32 2SD77 Ⓒ
SS-3
Battery Case

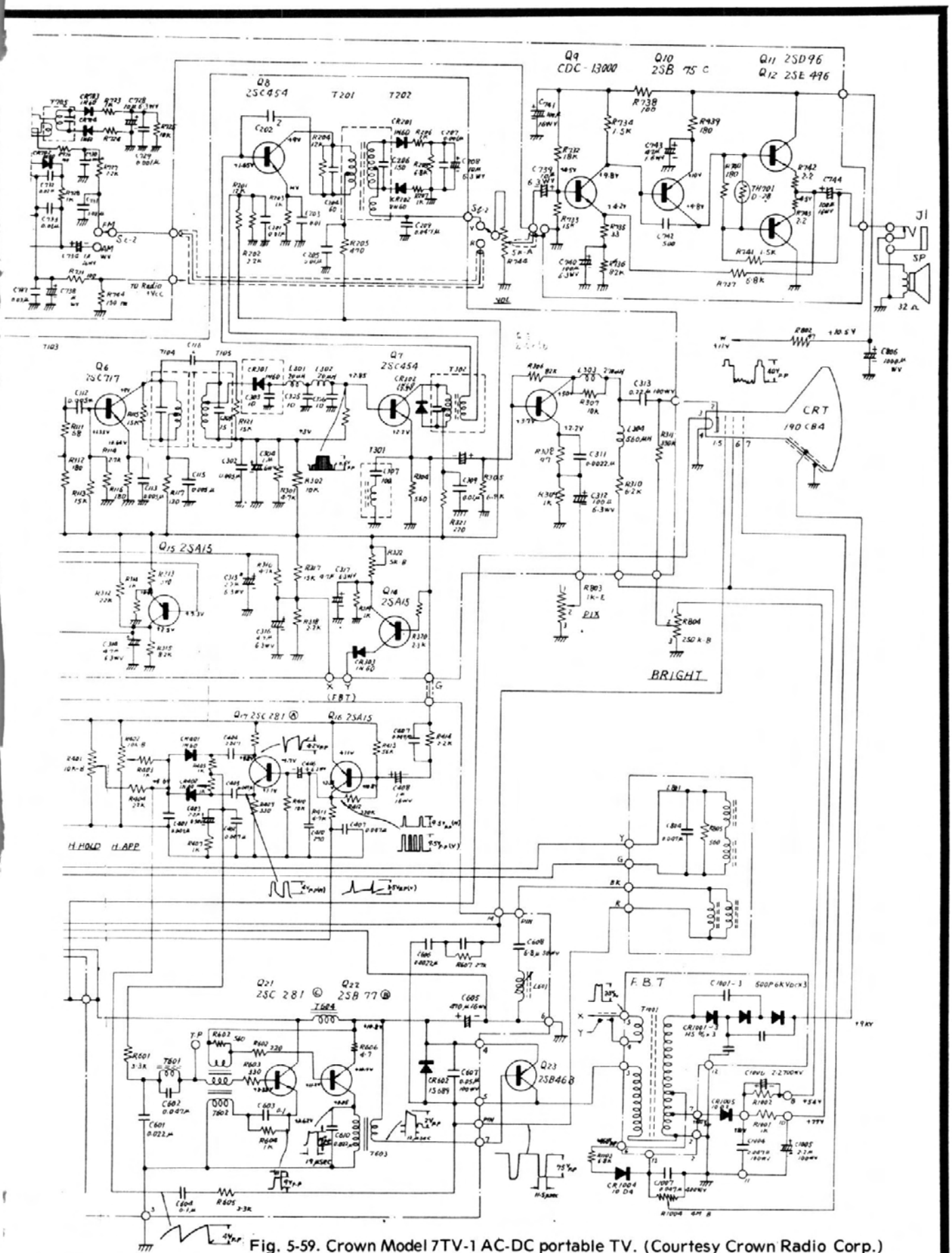

Fig. 5-59. Crown Model 7TV-1 AC-DC portable TV. (Courtesy Crown Radio Corp.)

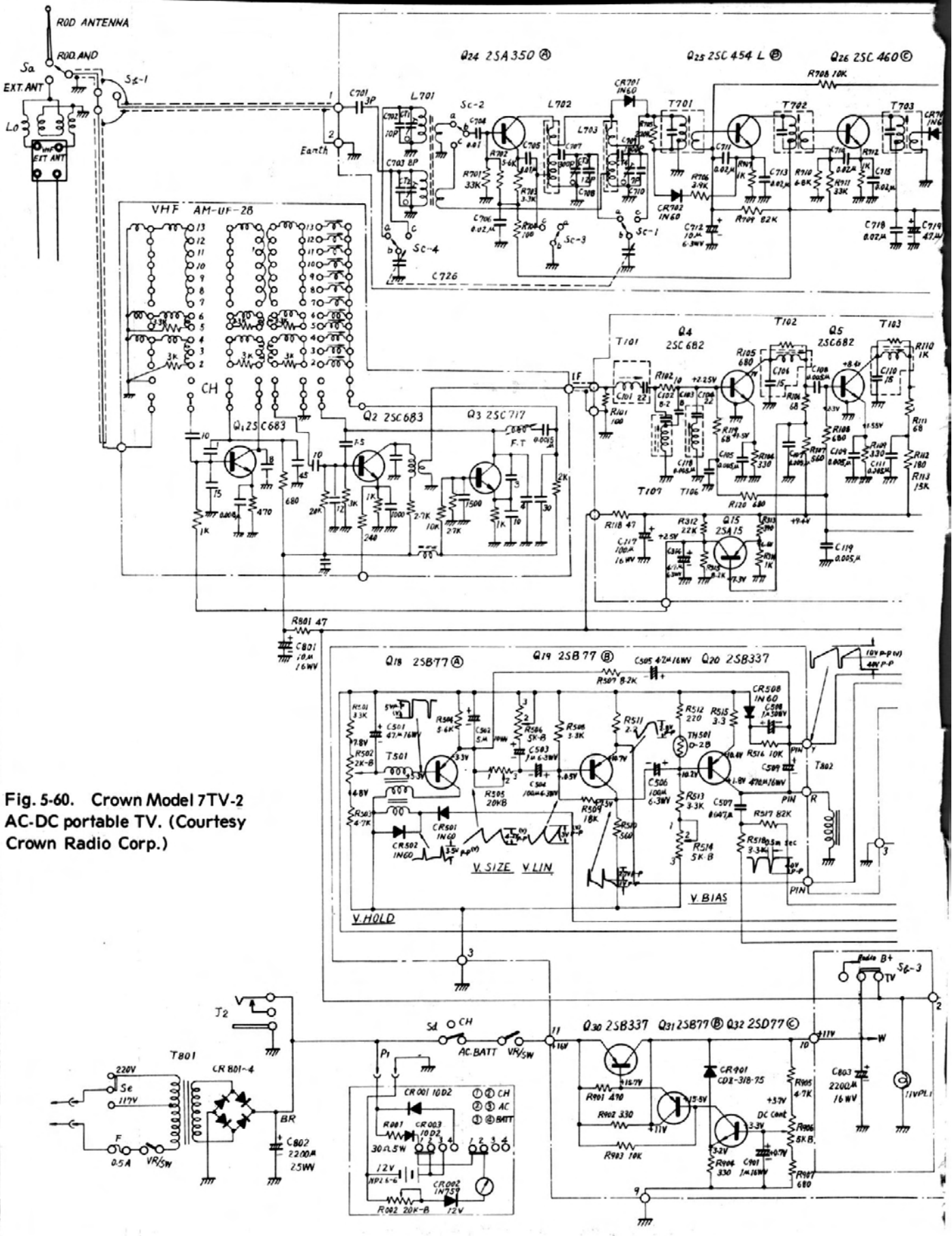

Fig. 5-60. Crown Model 7TV-2 AC-DC portable TV. (Courtesy Crown Radio Corp.)

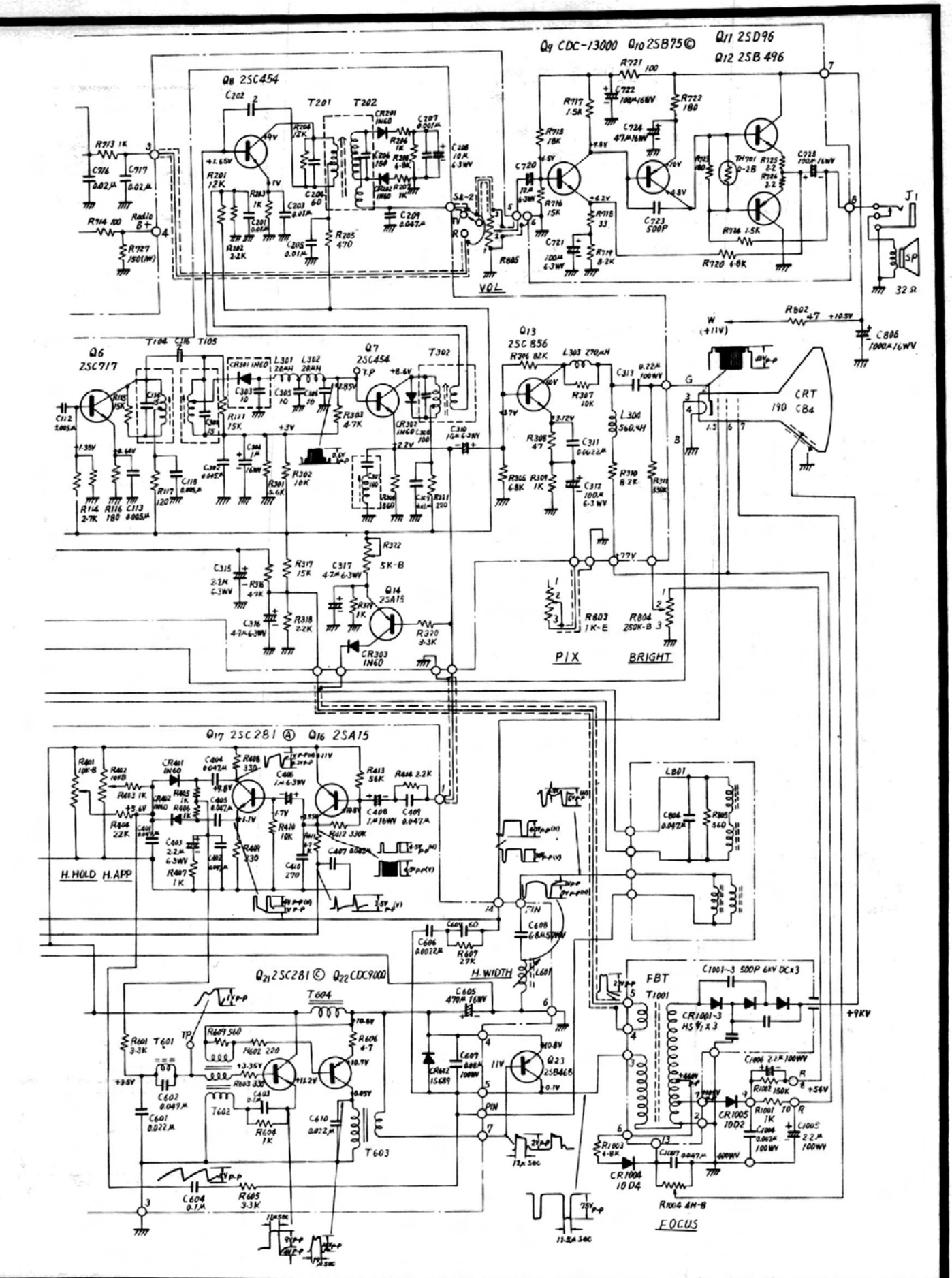
Q9 CDC-13000 Q10 2SB75©
Q11 2SD96
Q12 2SB 496
Q8 2SC454
T201
T202
VOL
Q6
2SC717
Q7
2SC454
T302
Q13
2SC 856
CRT
190 CB4
Q14
2SA15
PIX
BRIGHT
Q17 2SC281 Ⓐ Q16 2SA15
H.HOLD
H.APP
H.WIDTH
Q21 2SC281 © Q22 CDC9000
T604
T601
T602
T603
Q23
2SB468
FBT
T1001
FOCUS
+9KV
+54V
32 Ω

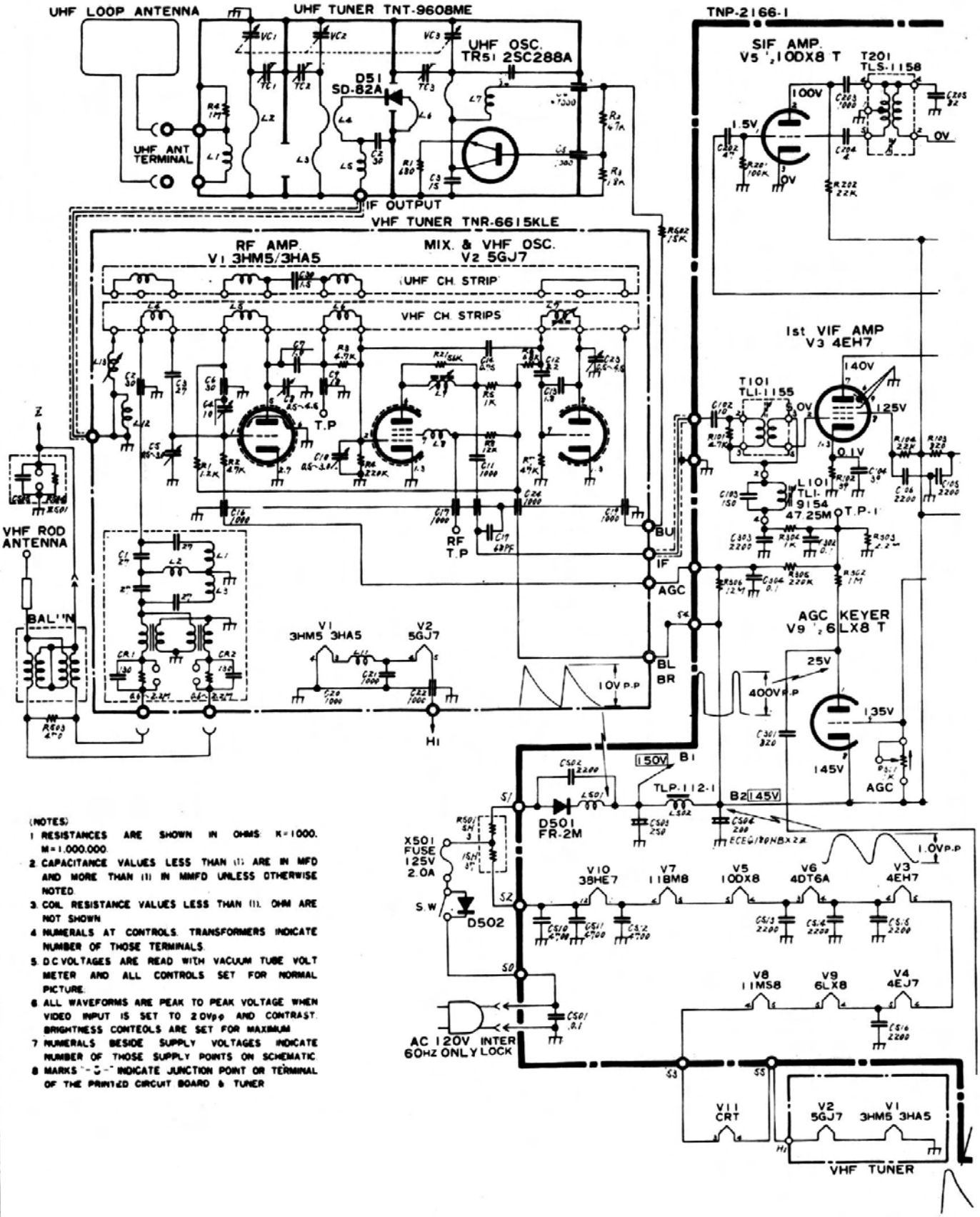

(NOTES)

1. RESISTANCES ARE SHOWN IN OHMS. K=1000. M=1,000,000.
2. CAPACITANCE VALUES LESS THAN (1) ARE IN MFD AND MORE THAN (1) IN MMFD UNLESS OTHERWISE NOTED.
3. COIL RESISTANCE VALUES LESS THAN (1) OHM ARE NOT SHOWN.
4. NUMERALS AT CONTROLS, TRANSFORMERS INDICATE NUMBER OF THOSE TERMINALS.
5. D.C VOLTAGES ARE READ WITH VACUUM TUBE VOLT METER AND ALL CONTROLS SET FOR NORMAL PICTURE.
6. ALL WAVEFORMS ARE PEAK TO PEAK VOLTAGE WHEN VIDEO INPUT IS SET TO 2.0Vp-p AND CONTRAST, BRIGHTNESS CONTEOLS ARE SET FOR MAXIMUM.
7. NUMERALS BESIDE SUPPLY VOLTAGES INDICATE NUMBER OF THOSE SUPPLY POINTS ON SCHEMATIC.
8. MARKS "-○-" INDICATE JUNCTION POINT OR TERMINAL OF THE PRINTED CIRCUIT BOARD & TUNER.

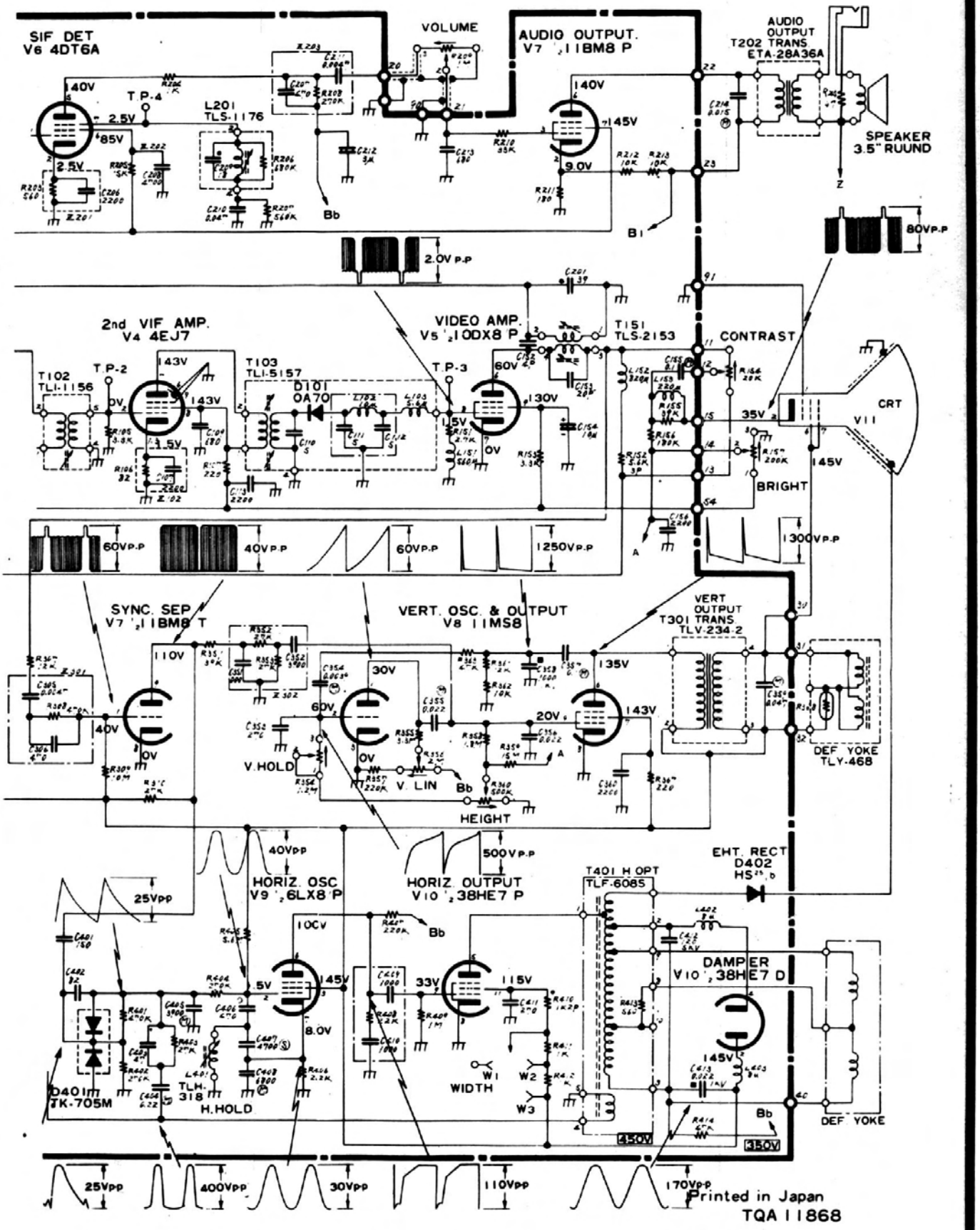

Fig. 5-61. Panasonic Model AN-72, 72C, 77C TV. (Courtesy Matsushita Electric Corp. of America)

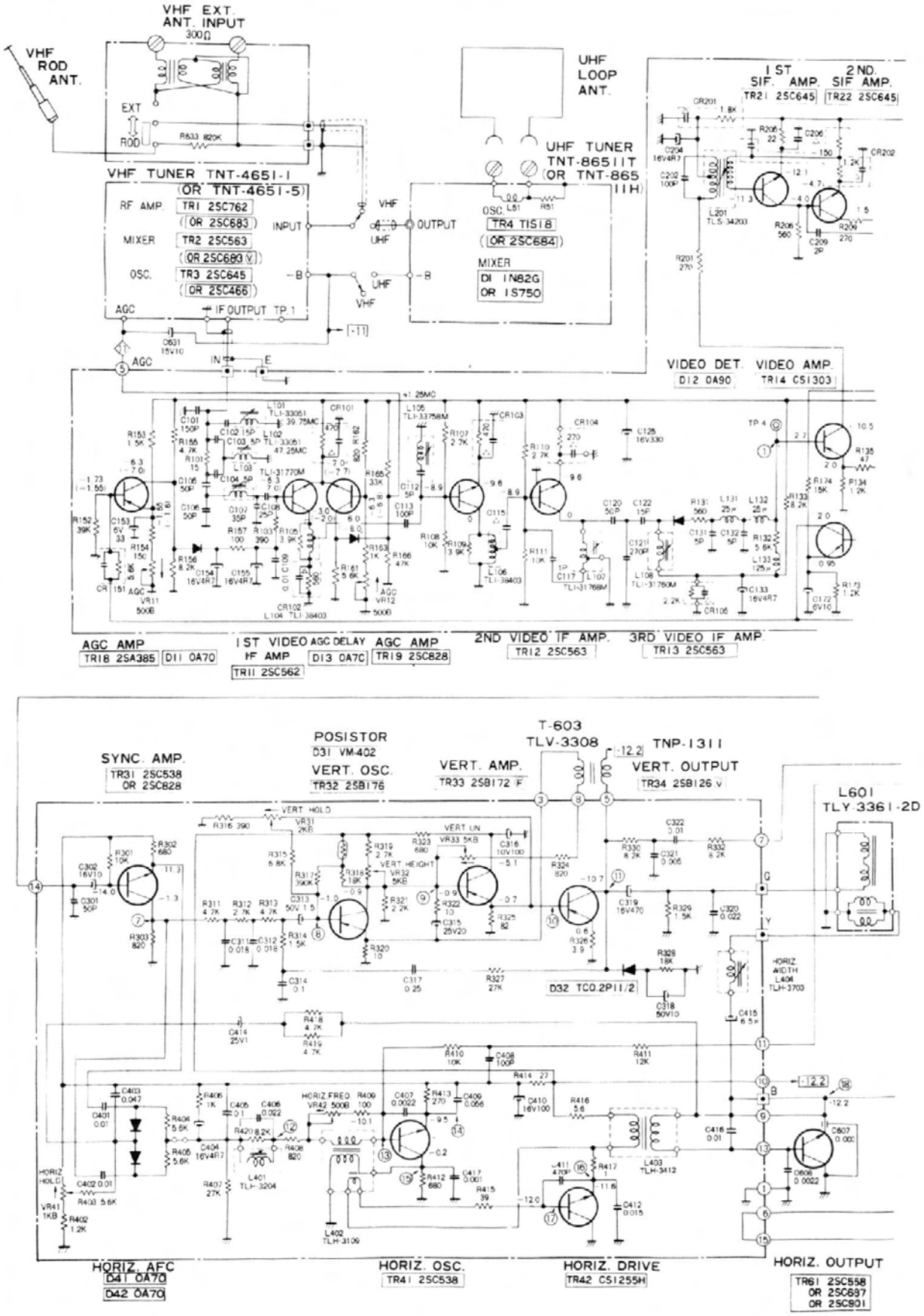
VHF EXT. ANT. INPUT 300Ω
VHF ROD ANT.
EXT
ROD
R633 820K
VHF TUNER TNT-4651-1 (OR TNT-4651-5)
RF AMP. TR1 2SC762 (OR 2SC683)
MIXER TR2 2SC563 (OR 2SC683 V)
OSC. TR3 2SC645 (OR 2SC466)
INPUT
VHF
UHF
OUTPUT
UHF LOOP ANT.
UHF TUNER TNT-8651IT (OR TNT-865 IIH)
OSC. L51 R51
TR4 TIS18 (OR 2SC684)
MIXER DI 1N82G OR 1S750
1 ST SIF. AMP. TR21 2SC645
2 ND. SIF. AMP. TR22 2SC645
AGC
IF OUTPUT TP.1
VIDEO DET. DI2 0A90
VIDEO AMP. TR14 CS1303
AGC AMP TR18 2SA385 DI1 0A70
1ST VIDEO IF AMP TR11 2SC562
AGC DELAY DI3 0A7C
AGC AMP TR19 2SC828
2ND VIDEO IF AMP. TR12 2SC563
3RD VIDEO IF AMP. TR13 2SC563
SYNC. AMP. TR31 2SC538 OR 2SC828
POSISTOR 031 VM-402
VERT. OSC. TR32 2SB176
VERT. AMP. TR33 2SB172 F
T-603 TLV-3308
TNP-1311
VERT. OUTPUT TR34 2SB126 V
L601 TLY-3361-2D
VERT. HOLD
VERT. LIN
VERT. HEIGHT
D32 TC0.2P11/2
HORIZ. WIDTH L404 TLH-3703
HORIZ. FREQ
HORIZ HOLD
L401 TLH-3204
L402 TLH-3109
L403 TLH-3412
HORIZ. AFC D41 0A70 D42 0A70
HORIZ. OSC. TR41 2SC538
HORIZ. DRIVE TR42 CS1255H
HORIZ. OUTPUT TR61 2SC558 OR 2SC697 OR 2SC901

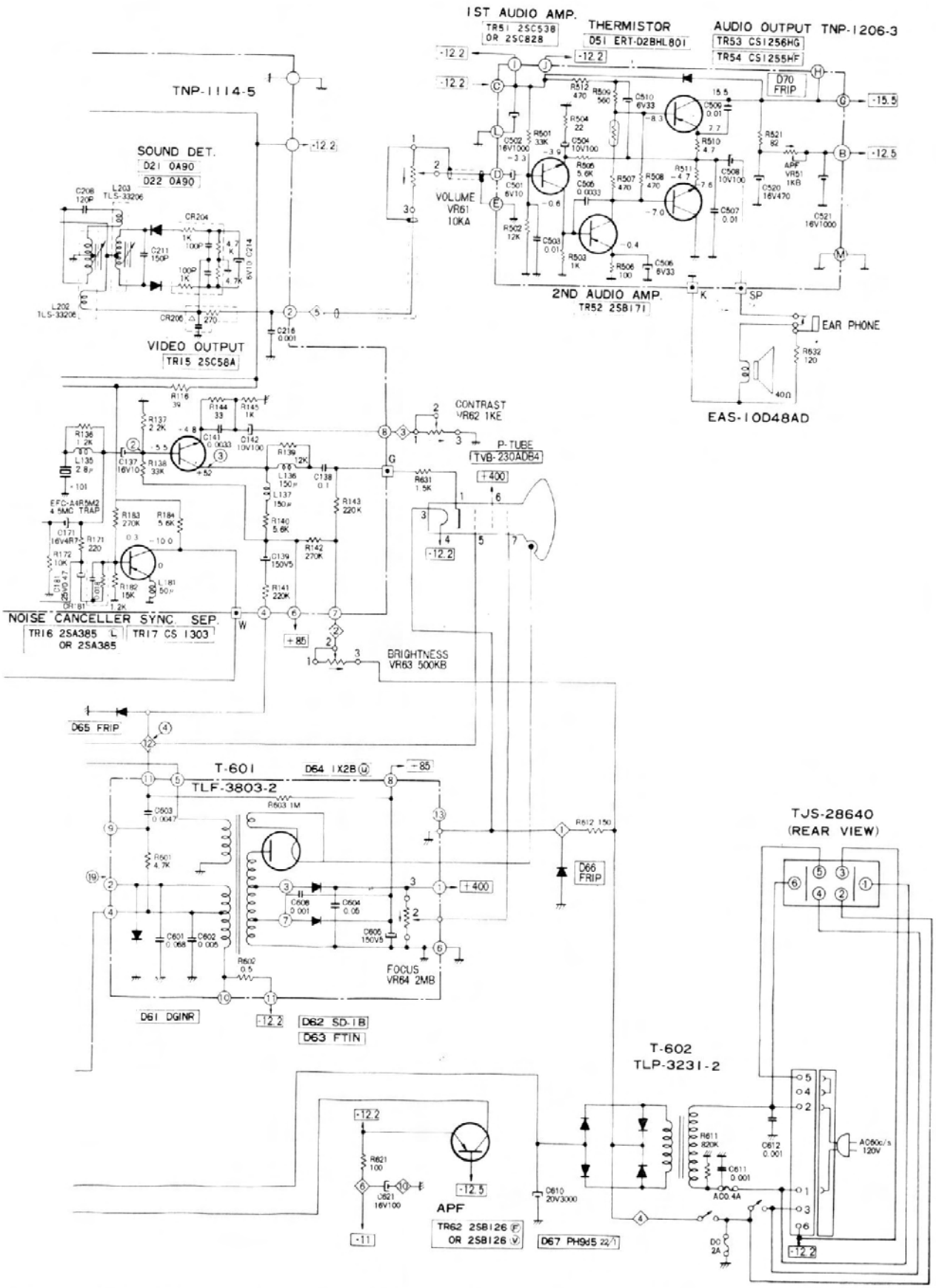

Fig. 5-62. Panasonic Model TR-329B AC-DC portable TV. (Courtesy Matsushita Electric Corp. of America)

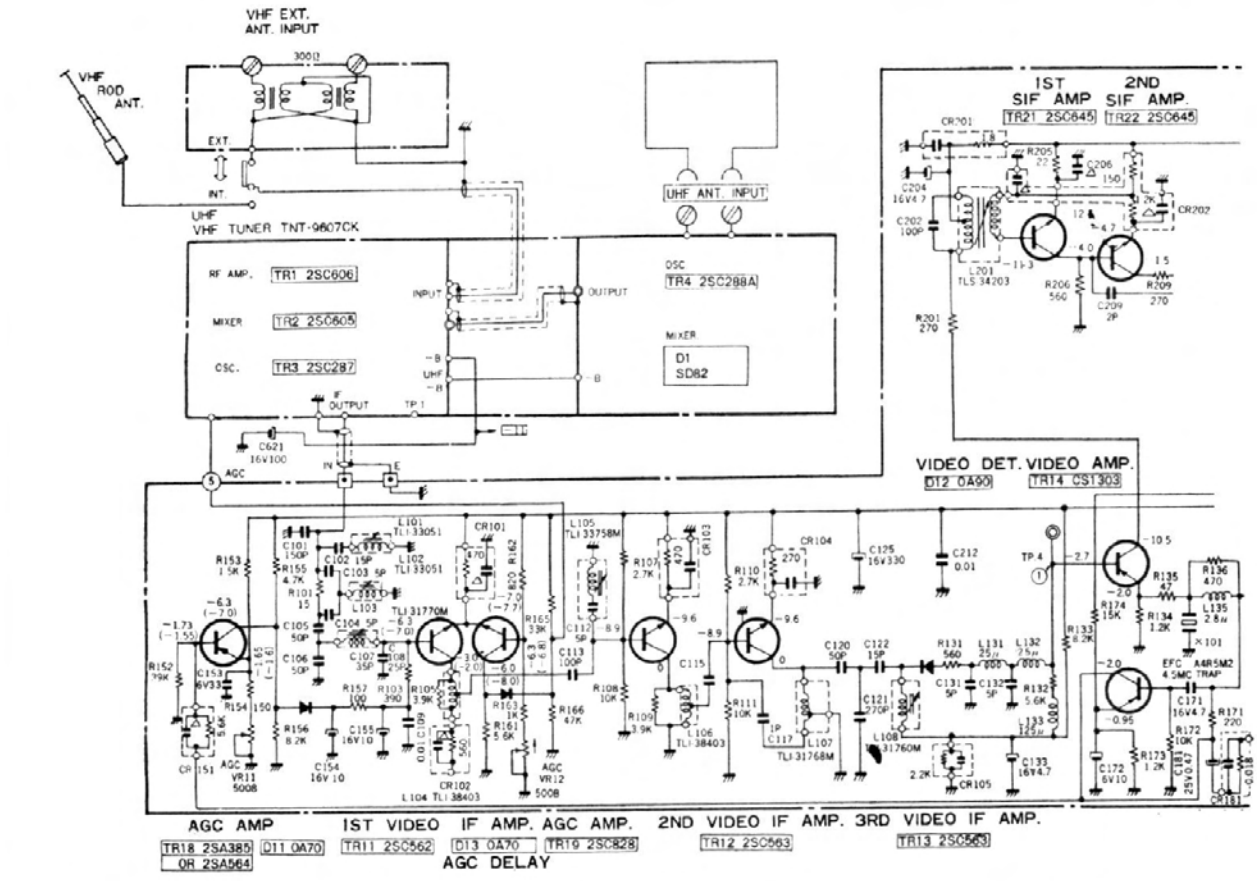
VHF EXT. ANT. INPUT
VHF ROD ANT.
UHF ANT. INPUT
UHF VHF TUNER TNT-9607CK
RF AMP. TR1 2SC606
MIXER TR2 2SC605
OSC. TR3 2SC287
OSC TR4 2SC288A
MIXER D1 SD82
IF OUTPUT
1ST SIF AMP TR21 2SC645
2ND SIF AMP TR22 2SC645
VIDEO DET. D12 0A90
VIDEO AMP. TR14 CS1303
AGC AMP TR18 2SA385 OR 2SA564
D11 0A70
1ST VIDEO IF AMP. TR11 2SC562
D13 0A70
AGC AMP. TR10 2SC828
AGC DELAY
2ND VIDEO IF AMP. TR12 2SC563
3RD VIDEO IF AMP. TR13 2SC563

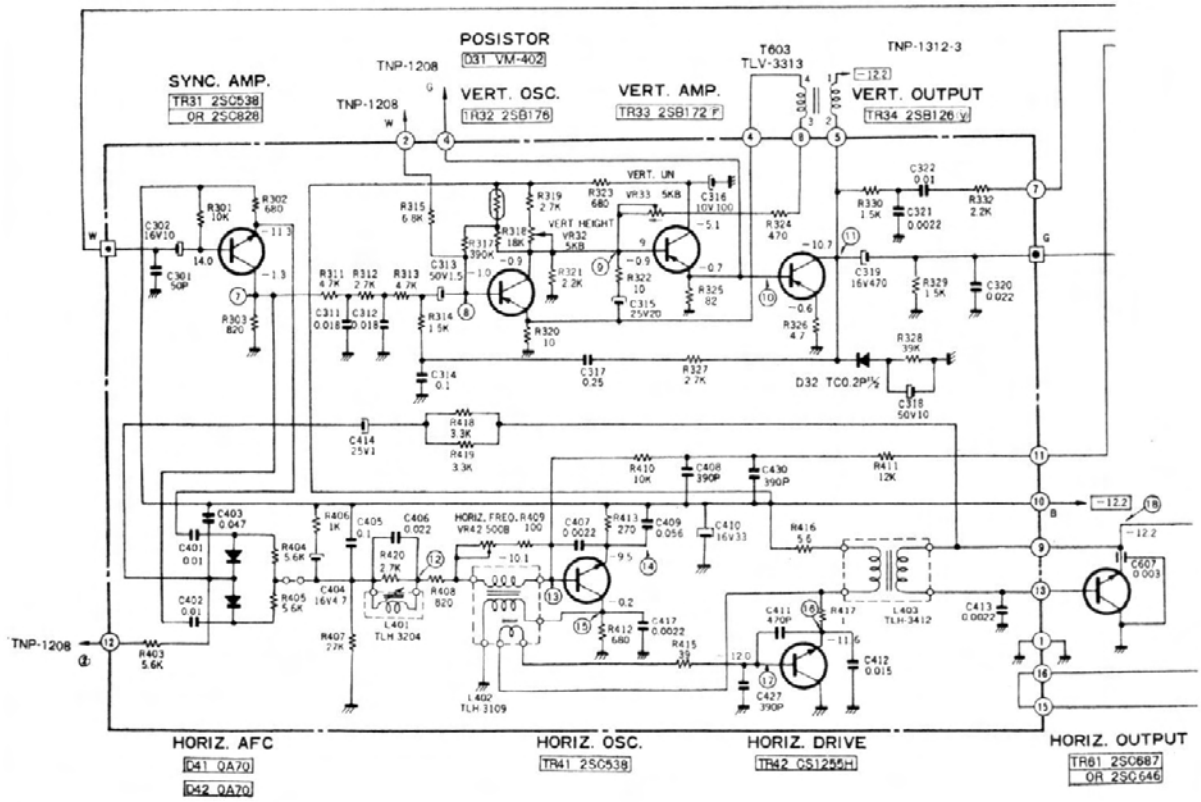
POSISTOR D31 VM-402
SYNC. AMP. TR31 2SC538 OR 2SC828
VERT. OSC. TR32 2SB176
VERT. AMP. TR33 2SB172 F
VERT. OUTPUT TR34 2SB126 y
T603 TLV-3313
TNP-1312-3
TNP-1208
HORIZ. AFC D41 0A70 D42 0A70
HORIZ. OSC. TR41 2SC538
HORIZ. DRIVE TR42 CS1255H
HORIZ. OUTPUT TR61 2SC687 OR 2SC646

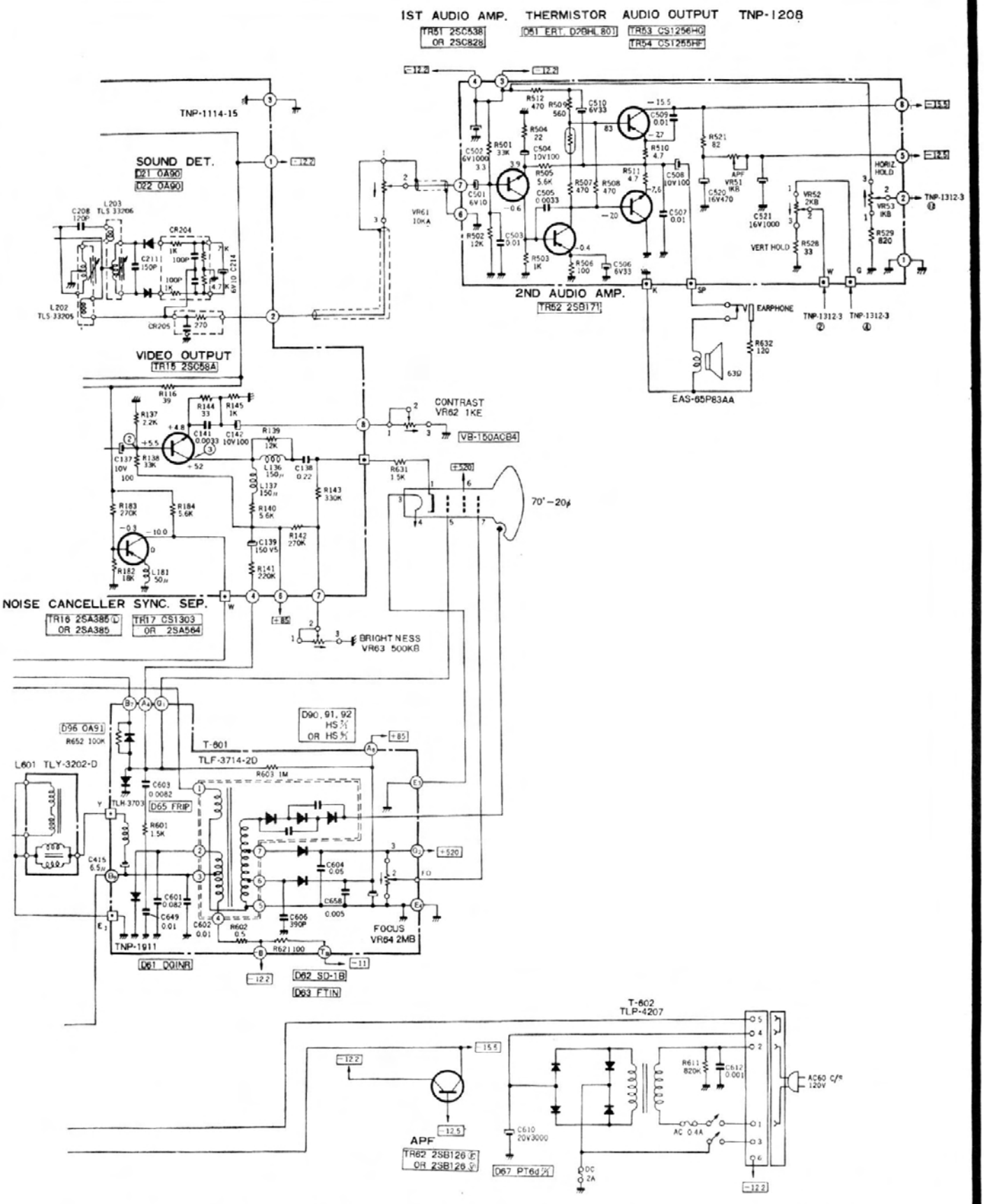

Fig. 5-63. Penncrest Model 1313 AC-DC portable TV (made by Matsushita Electric Corp. of America). (Courtesy J. C. Penney Co.)

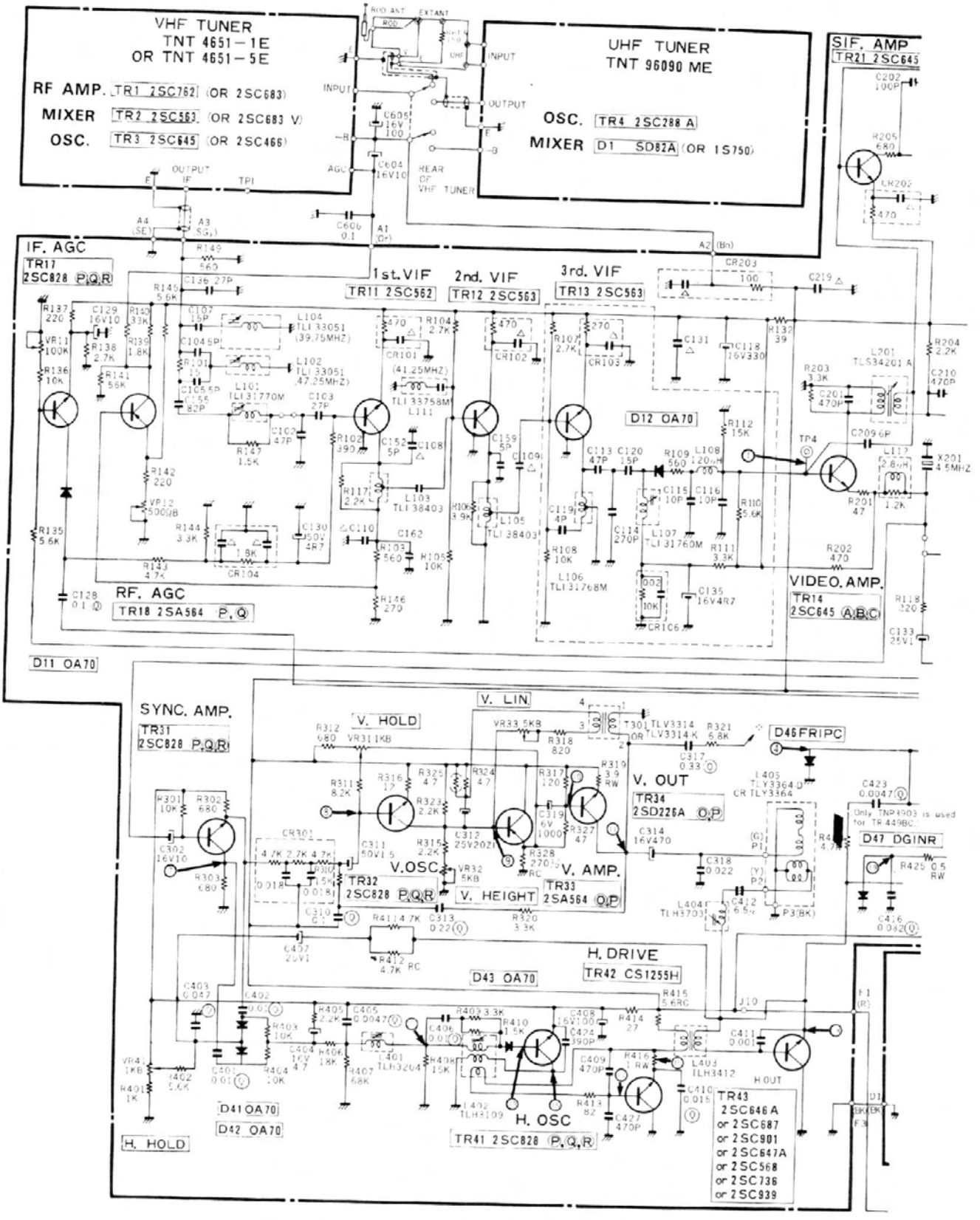
VHF TUNER
TNT 4651-1E
OR TNT 4651-5E
RF AMP. TR1 2SC762 (OR 2SC683)
MIXER TR2 2SC563 (OR 2SC683 V)
OSC. TR3 2SC645 (OR 2SC466)
UHF TUNER
TNT 96090 ME
OSC. TR4 2SC288 A
MIXER D1 SD82A (OR 1S750)
SIF. AMP
TR21 2SC645
IF. AGC
TR17
2SC828 P,Q,R
1st. VIF
TR11 2SC562
2nd. VIF
TR12 2SC563
3rd. VIF
TR13 2SC563
D12 OA70
VIDEO. AMP.
TR14
2SC645 A,B,C
RF. AGC
TR18 2SA564 P,Q
D11 OA70
SYNC. AMP.
TR31
2SC828 P,Q,R
V. HOLD
V. LIN
V. OUT
TR34
2SD226A O,P
D46FRIPC
D47 DGINR
V.OSC
TR32
2SC828 P,Q,R
V. HEIGHT
V. AMP.
TR33
2SA564 O,P
H. DRIVE
TR42 CS1255H
D43 OA70
H. OSC
TR41 2SC828 P,Q,R
H. HOLD
D41 OA70
D42 OA70
TR43
2SC646A
or 2SC687
or 2SC901
or 2SC647A
or 2SC568
or 2SC736
or 2SC939
H OUT

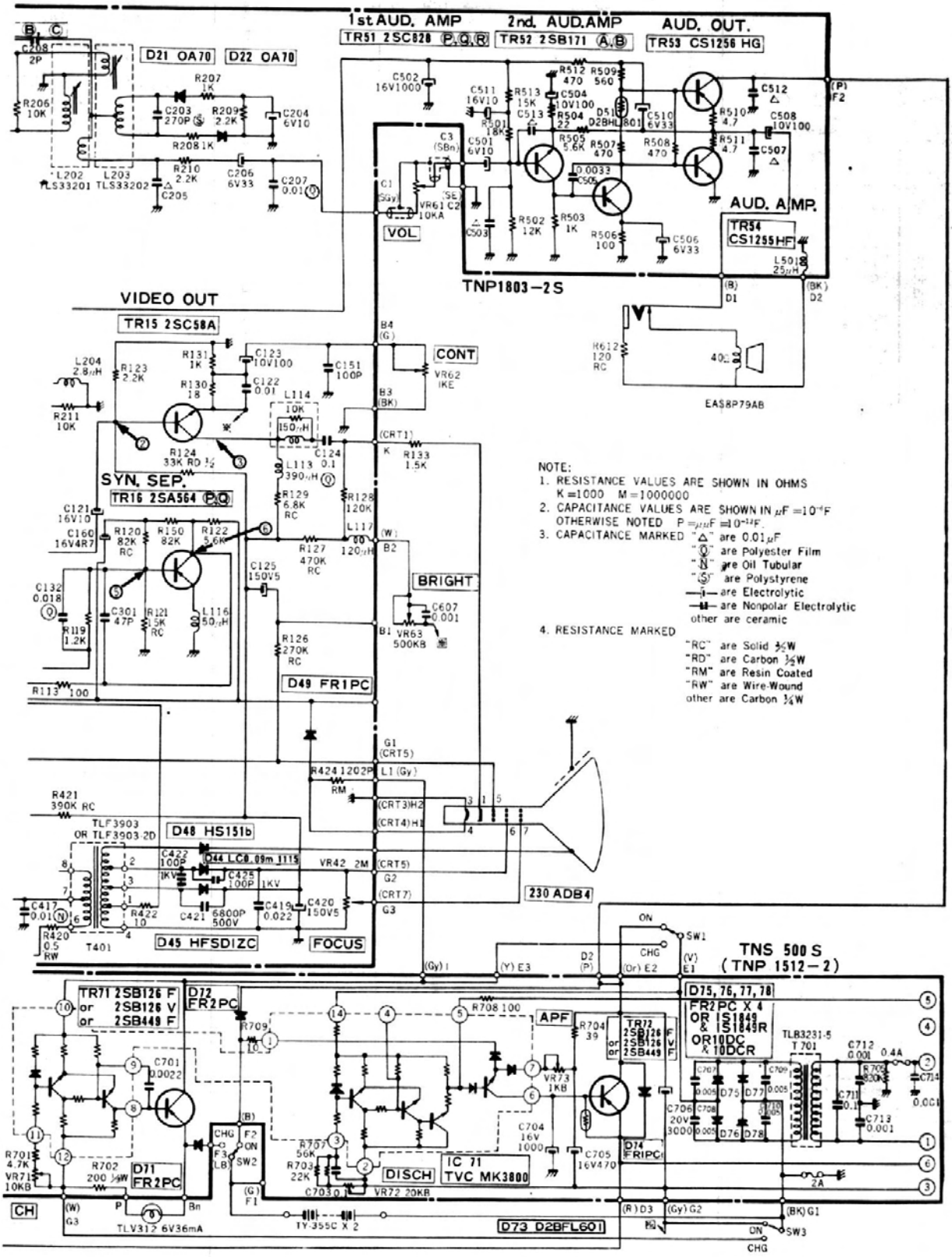

Fig. 5-64. Panasonic Model TR-449B AC-DC portable TV. (Courtesy Matsushita Electric Corp. of America)

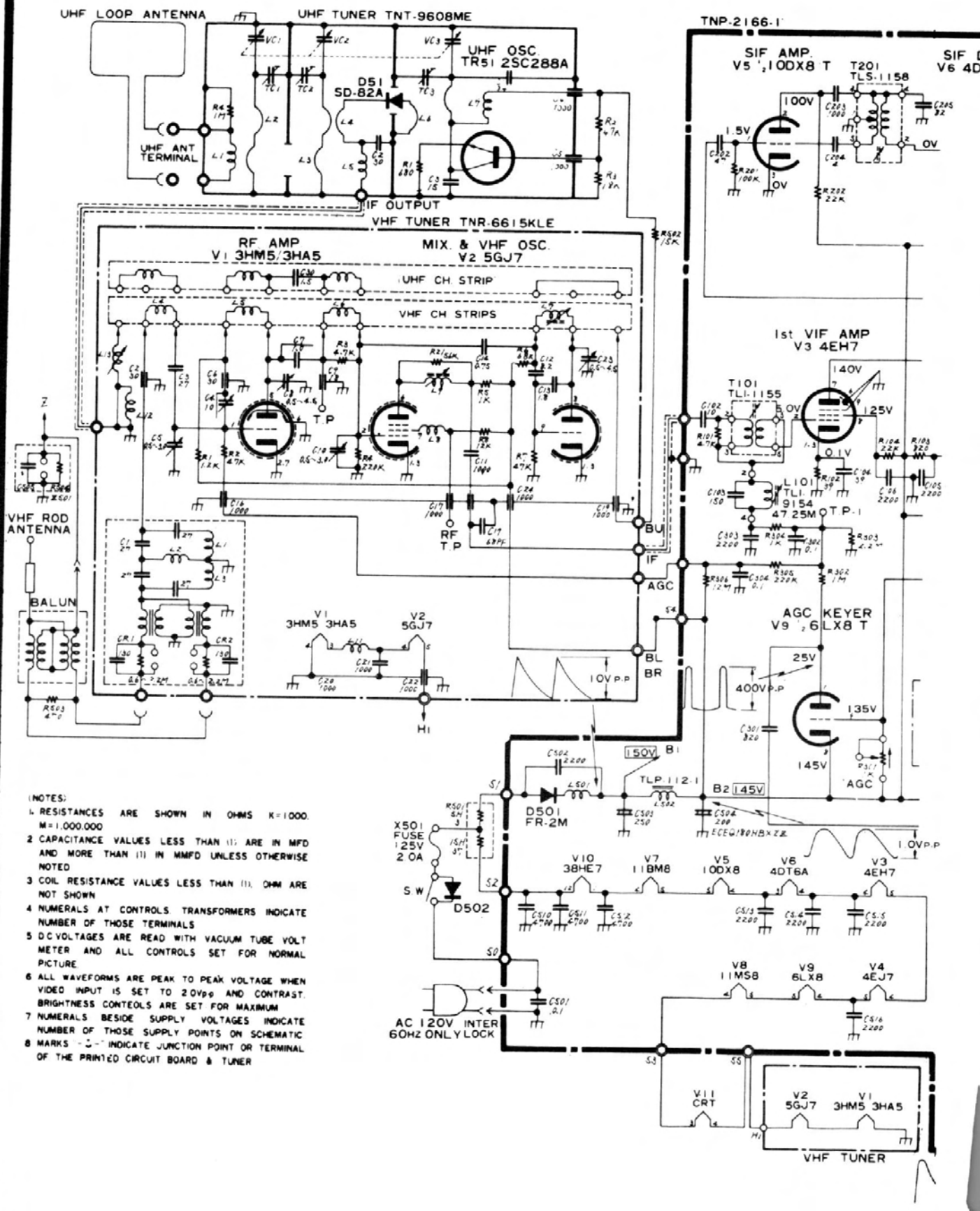

(NOTES)

1. RESISTANCES ARE SHOWN IN OHMS K=1000. M=1,000,000
2. CAPACITANCE VALUES LESS THAN (1) ARE IN MFD AND MORE THAN (1) IN MMFD UNLESS OTHERWISE NOTED
3. COIL RESISTANCE VALUES LESS THAN (1) OHM ARE NOT SHOWN
4. NUMERALS AT CONTROLS TRANSFORMERS INDICATE NUMBER OF THOSE TERMINALS
5. DC VOLTAGES ARE READ WITH VACUUM TUBE VOLT METER AND ALL CONTROLS SET FOR NORMAL PICTURE.
6. ALL WAVEFORMS ARE PEAK TO PEAK VOLTAGE WHEN VIDEO INPUT IS SET TO 2.0Vp-p AND CONTRAST, BRIGHTNESS CONTEOLS ARE SET FOR MAXIMUM
7. NUMERALS BESIDE SUPPLY VOLTAGES INDICATE NUMBER OF THOSE SUPPLY POINTS ON SCHEMATIC
8. MARKS "○" INDICATE JUNCTION POINT OR TERMINAL OF THE PRINTED CIRCUIT BOARD & TUNER

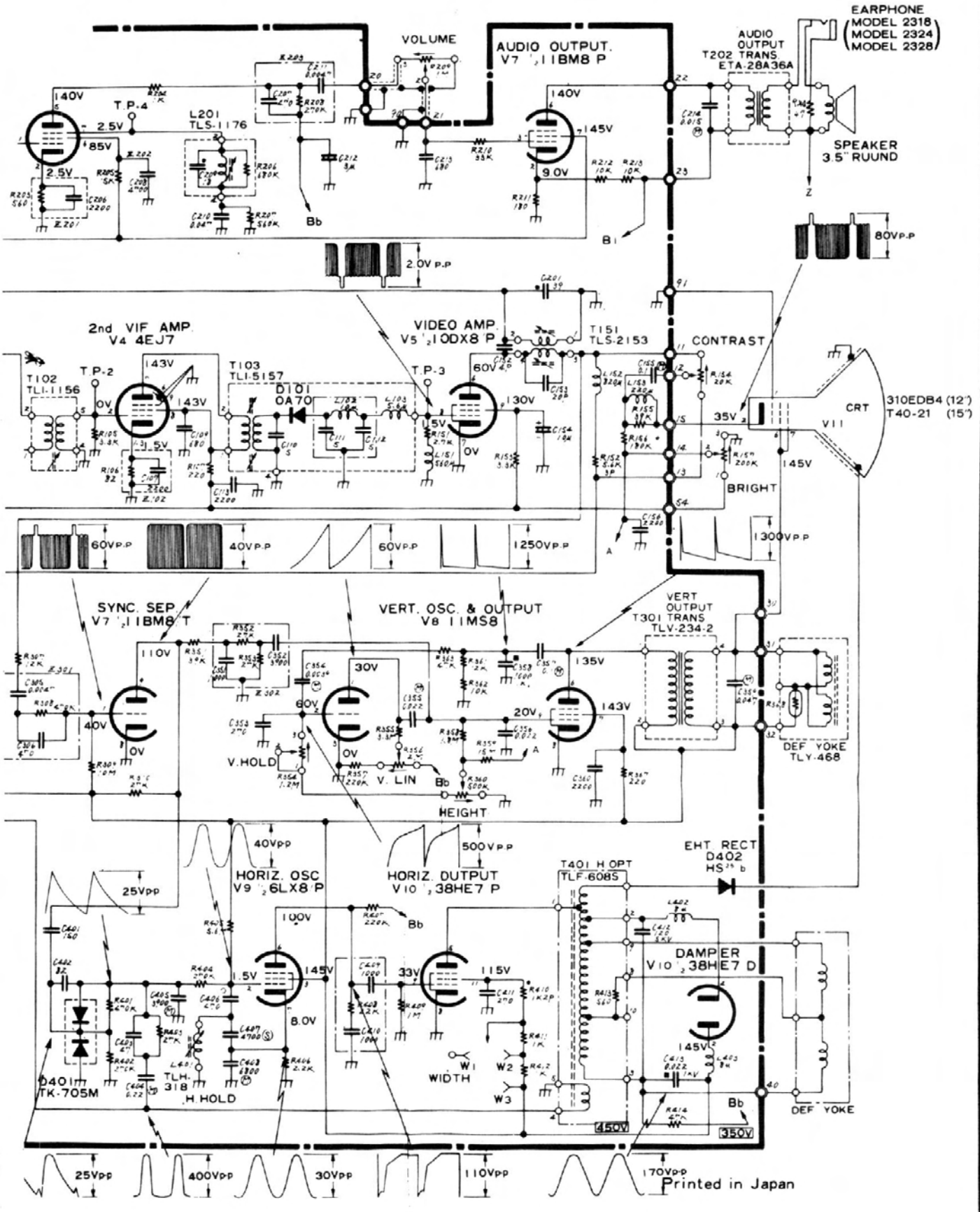

Fig. 5-65. Penncrest Model 2331, 2318, 2324, 2328 portable TV (made by Matsushita Electric Corp. of America). (Courtesy J. C. Penney Co.)

NOTES :

ALL RESISTANCE VALUES IN OHMS AND ½ WATT RATING UNLESS OTHERWISE SPECIFIED.

K = 1000 OHMS, M = MEG. OHMS

ALL CAPACITANCE VALUES LESS THAN 1.0 IN MF. AND ABOVE 1.0 IN MMF UNLESS OTHERWISE NOTED.

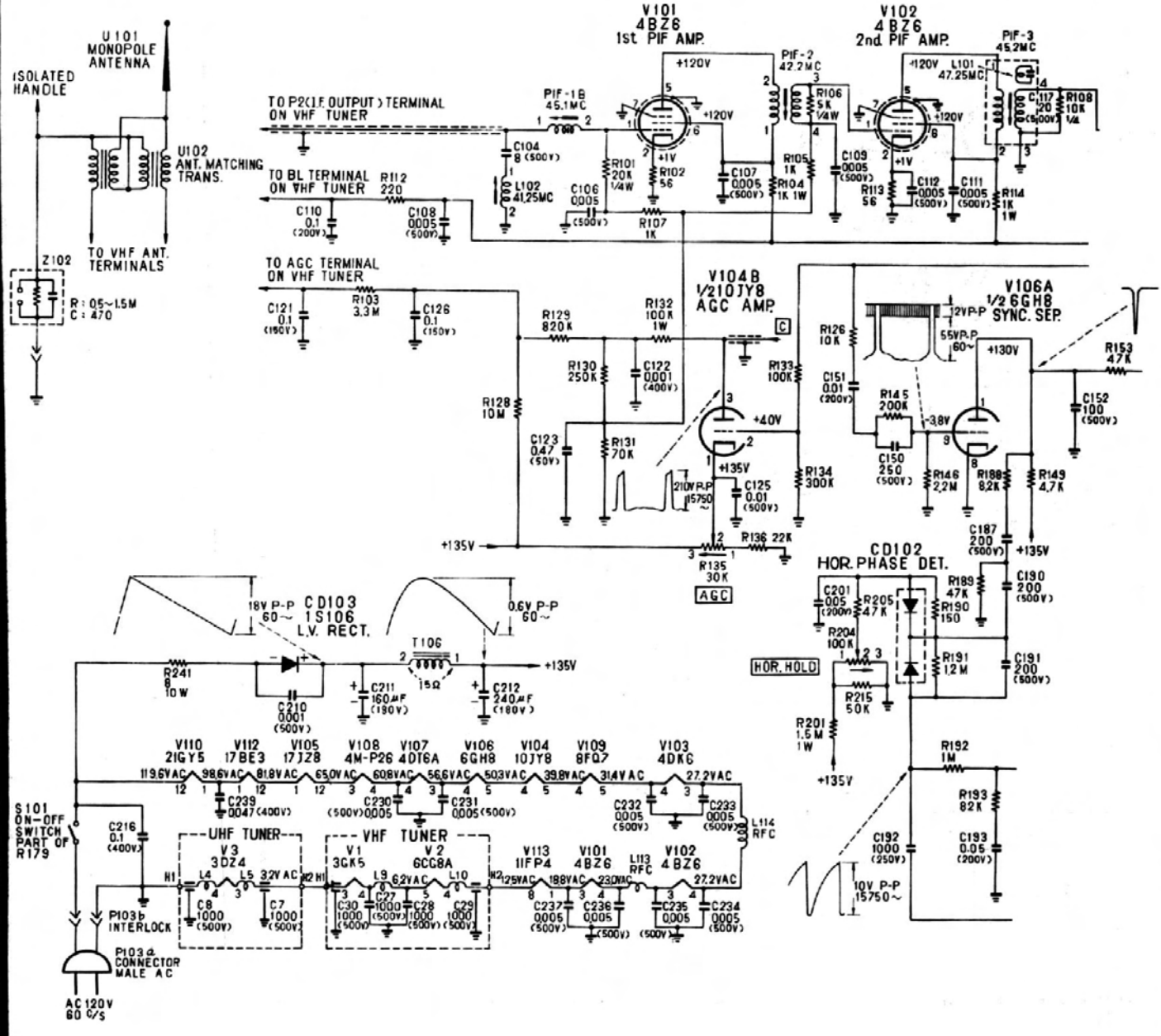

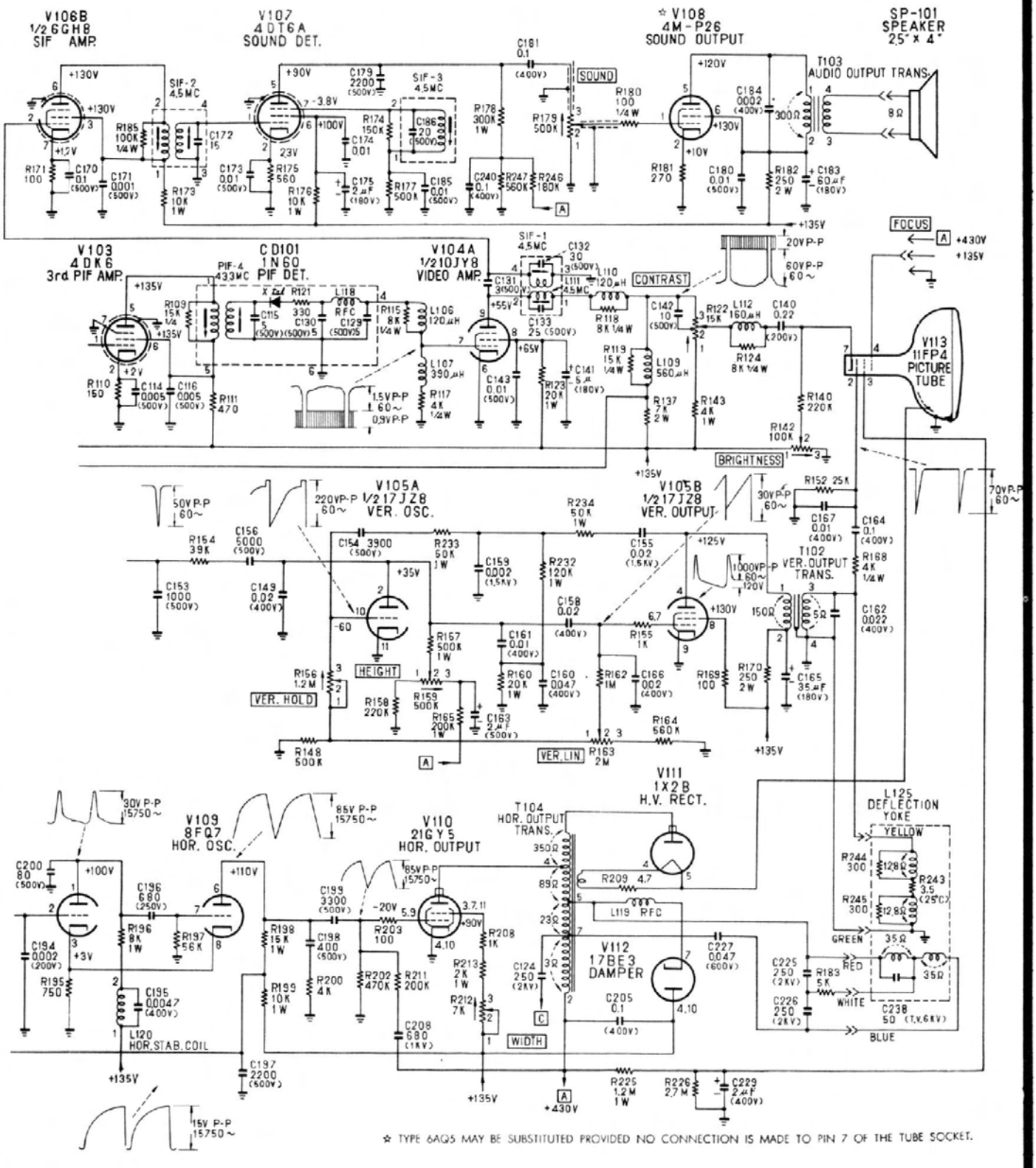

Fig. 5-66. Penncrest Model 2311-82 portable TV (made by Toshiba America Inc.). (Courtesy J. C. Penney Co.)

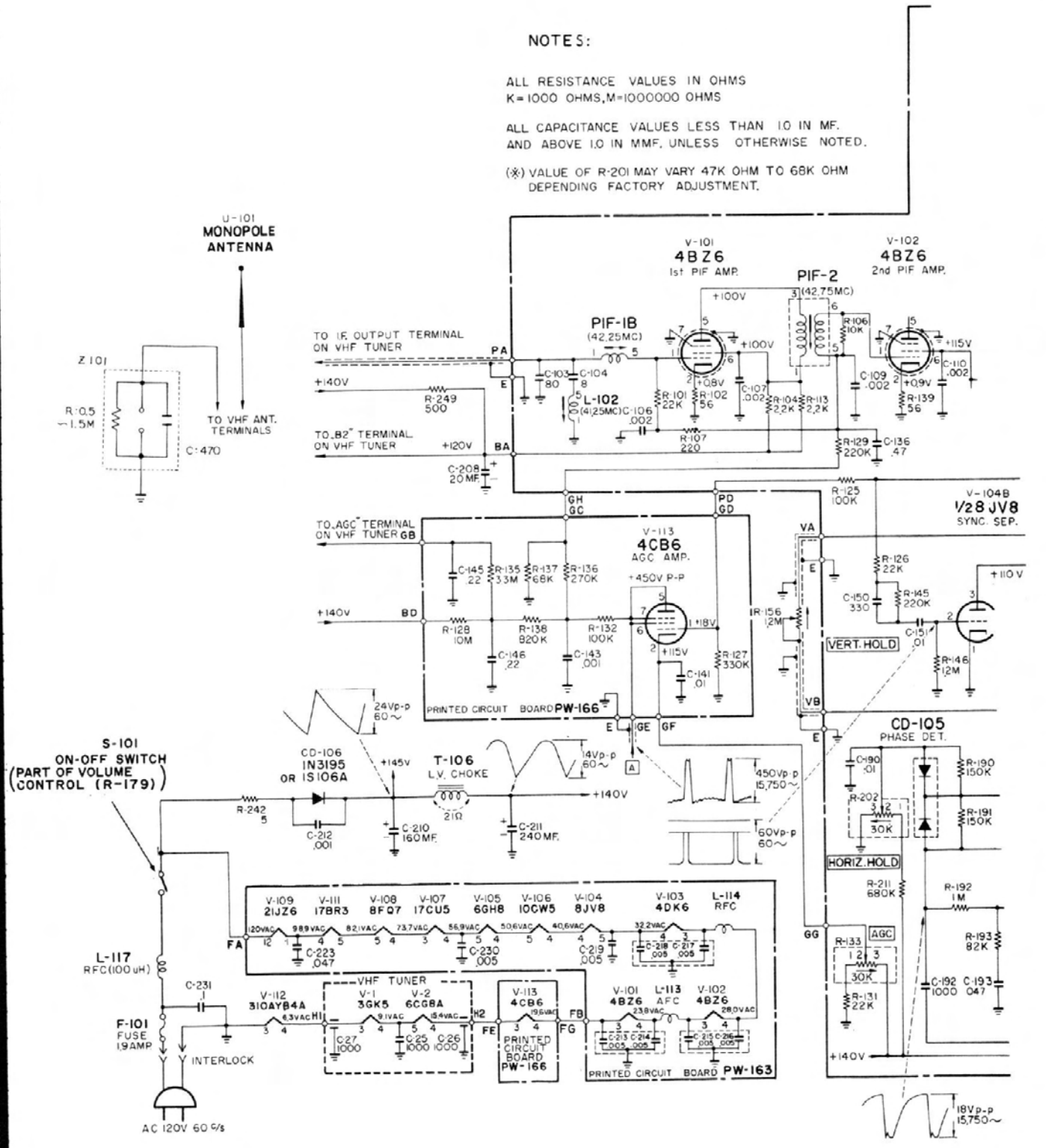
NOTES:
ALL RESISTANCE VALUES IN OHMS
K=1000 OHMS, M=1000000 OHMS
ALL CAPACITANCE VALUES LESS THAN 1.0 IN MF.
AND ABOVE 1.0 IN MMF. UNLESS OTHERWISE NOTED.
(※) VALUE OF R-201 MAY VARY 47K OHM TO 68K OHM
DEPENDING FACTORY ADJUSTMENT.
U-101
MONOPOLE
ANTENNA
Z-101
R-0.5
-1.5M
C-470
TO VHF ANT.
TERMINALS
V-101
4BZ6
1st PIF AMP.
PIF-1B
(42.25MC)
L-102
(41.25MC)
V-102
4BZ6
2nd PIF AMP.
PIF-2
(42.75MC)
TO I.F. OUTPUT TERMINAL
ON VHF TUNER
TO "AGC" TERMINAL
ON VHF TUNER
TO "B2" TERMINAL
ON VHF TUNER
+140V
+120V
+100V
+115V
+110V
+0.8V
+0.9V
+18V
+145V
+450V P-P
V-113
4CB6
AGC AMP.
V-104B
1/2 8JV8
SYNC. SEP.
VERT. HOLD
HORIZ. HOLD
AGC
CD-105
PHASE DET.
PRINTED CIRCUIT BOARD PW-166
PRINTED CIRCUIT BOARD PW-163
S-101
ON-OFF SWITCH
(PART OF VOLUME
CONTROL (R-179))
CD-106
IN3195
OR IS106A
T-106
L.V. CHOKE
L-117
RFC(100 uH)
F-101
FUSE
1.9AMP
INTERLOCK
AC 120V 60 C/s
V-109 21JZ6
V-111 17BR3
V-108 8FQ7
V-107 17CU5
V-105 6GH8
V-106 10CW5
V-104 8JV8
V-103 4DK6
L-114 RFC
V-112 310AYB4A
VHF TUNER
V-1 3GK5
V-2 6CG8A
V-113 4CB6
V-101 4BZ6
L-113 AFC
V-102 4BZ6
24Vp-p 60~
14Vp-p 60~
450Vp-p 15,750~
60Vp-p 60~
18Vp-p 15,750~

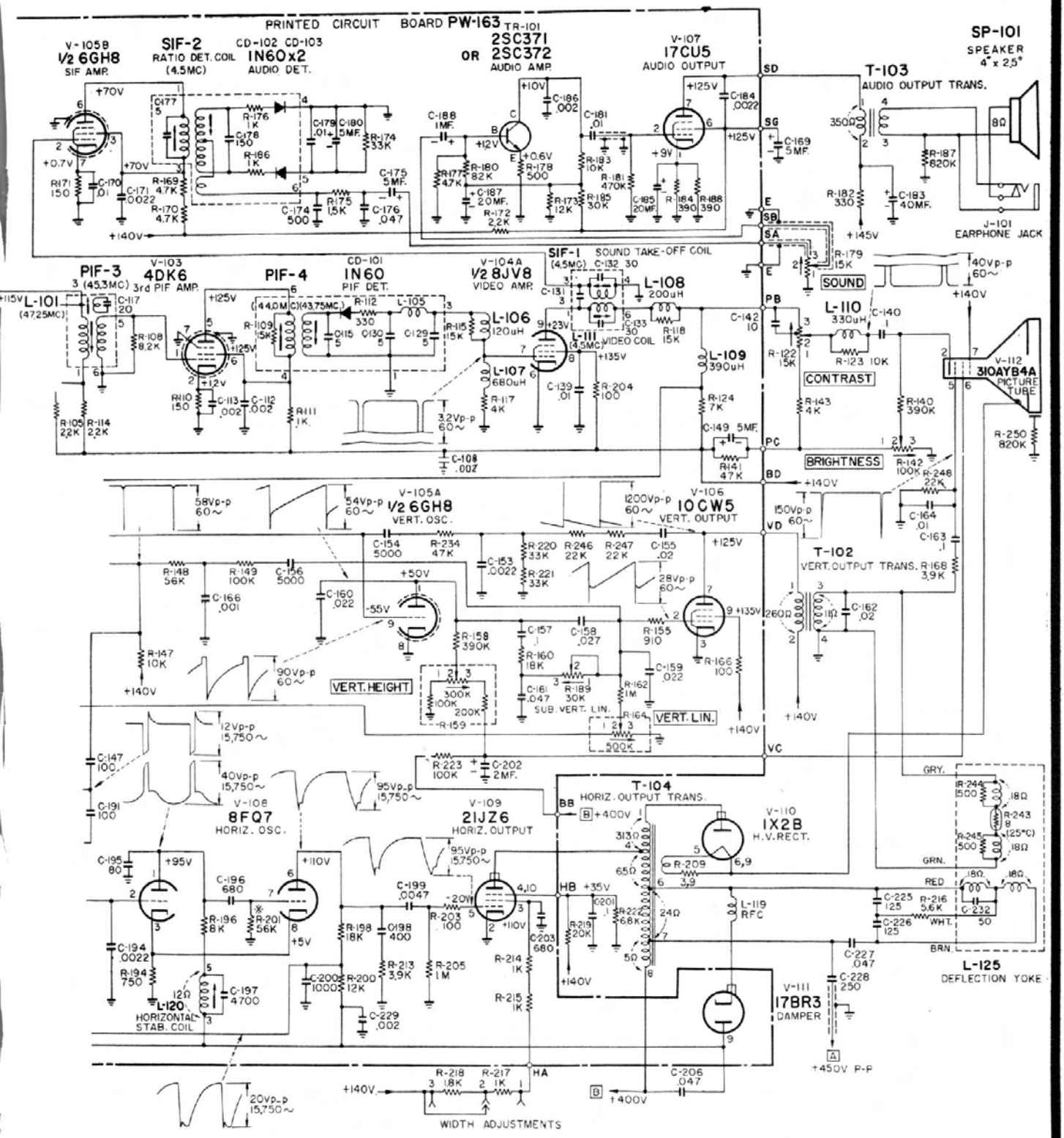

Fig. 5-67. Penncrest Model 2310-44 TV (made by Toshiba America Inc.). (Courtesy J. C. Penney Co.)

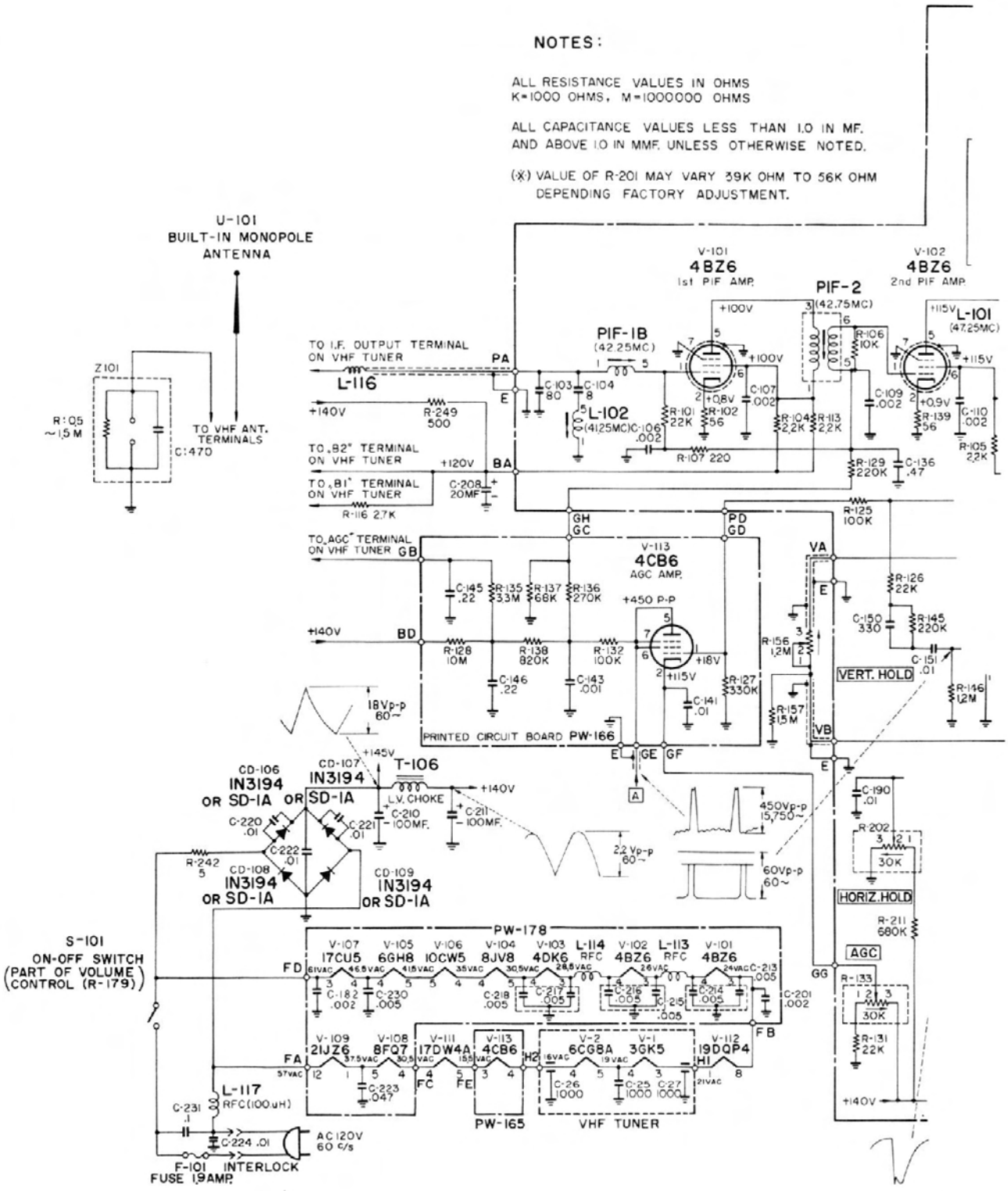
NOTES:
ALL RESISTANCE VALUES IN OHMS
K=1000 OHMS, M=1000000 OHMS
ALL CAPACITANCE VALUES LESS THAN 1.0 IN MF.
AND ABOVE 1.0 IN MMF. UNLESS OTHERWISE NOTED.
(※) VALUE OF R-201 MAY VARY 39K OHM TO 56K OHM
DEPENDING FACTORY ADJUSTMENT.
U-101
BUILT-IN MONOPOLE
ANTENNA
Z101
R-105 ~1.5 M
C-1470
TO VHF ANT. TERMINALS
TO I.F. OUTPUT TERMINAL ON VHF TUNER
L-116
+140V
R-249 500
TO „B2" TERMINAL ON VHF TUNER
+120V
TO „B1" TERMINAL ON VHF TUNER
R-116 2.7K
C-208 20MF
TO „AGC" TERMINAL ON VHF TUNER
PA
E
BA
GB
BD
GH
GC
PD
GD
V-101
4BZ6
1st PIF AMP.
PIF-1B
(42.25MC)
L-102
(41.25MC)
V-102
4BZ6
2nd PIF AMP.
PIF-2
(42.75MC)
L-101
(47.25MC)
+100V
+115V
+0.8V
+0.9V
C-103 80
C-104 8
C-106 .002
C-107 .002
C-109 .002
C-110 .002
R-101 22K
R-102 56
R-104 2.2K
R-113 2.2K
R-106 10K
R-139 56
R-105 2.2K
R-107 220
R-129 220K
C-136 .47
R-125 100K
V-113
4CB6
AGC AMP.
+450 P-P
+18V
C-145 .22
R-135 33M
R-137 68K
R-136 270K
R-128 10M
R-138 820K
R-132 100K
C-146 .22
C-143 .001
R-127 330K
C-141 .01
VA
VB
E
R-126 22K
C-150 330
R-145 220K
C-151 .01
R-156 1.2M
R-157 1.5M
VERT. HOLD
R-146 1.2M
18Vp-p 60~
PRINTED CIRCUIT BOARD PW-166
GE
GF
A
+145V
T-106
L.V. CHOKE
C-210 100MF.
C-211 100MF.
+140V
CD-106 IN3194 OR SD-1A
CD-107 IN3194 OR SD-1A
CD-108 IN3194 OR SD-1A
CD-109 IN3194 OR SD-1A
C-220 .01
C-221 .01
C-222 .01
R-242 5
450Vp-p 15,750~
2.2 Vp-p 60~
60Vp-p 60~
C-190 .01
R-202 30K
HORIZ.HOLD
R-211 680K
AGC
R-133 30K
R-131 22K
+140V
GG
S-101
ON-OFF SWITCH
(PART OF VOLUME CONTROL (R-179))
PW-178
V-107 17CU5 61VAC
V-105 6GH8 46.5VAC
V-106 10CW5 41.5VAC
V-104 8JV8 35VAC
V-103 4DK6 30.5VAC
L-114 RFC 28.5VAC
V-102 4BZ6 26VAC
L-113 RFC
V-101 4BZ6 24VAC
FD
C-182 .002
C-230 .005
C-218 .005
C-217 .005
C-216 .005
C-215 .005
C-214 .005
C-213 .005
C-201 .002
V-109 21JZ6 37.5VAC
V-108 8FQ7 30.5VAC
V-111 17DW4A 15.5VAC
V-113 4CB6
V-2 6CG8A 19VAC
V-1 3GK5
V-112 19DQP4
FA
FB
FC
FE
H2
H1
57VAC
16VAC
21VAC
C-223 .047
C-26 1000
C-25 1000
C-27 1000
PW-165
VHF TUNER
L-117
RFC(100uH)
C-231 .1
C-224 .01
AC 120V 60 c/s
F-101 FUSE 1.9AMP.
INTERLOCK

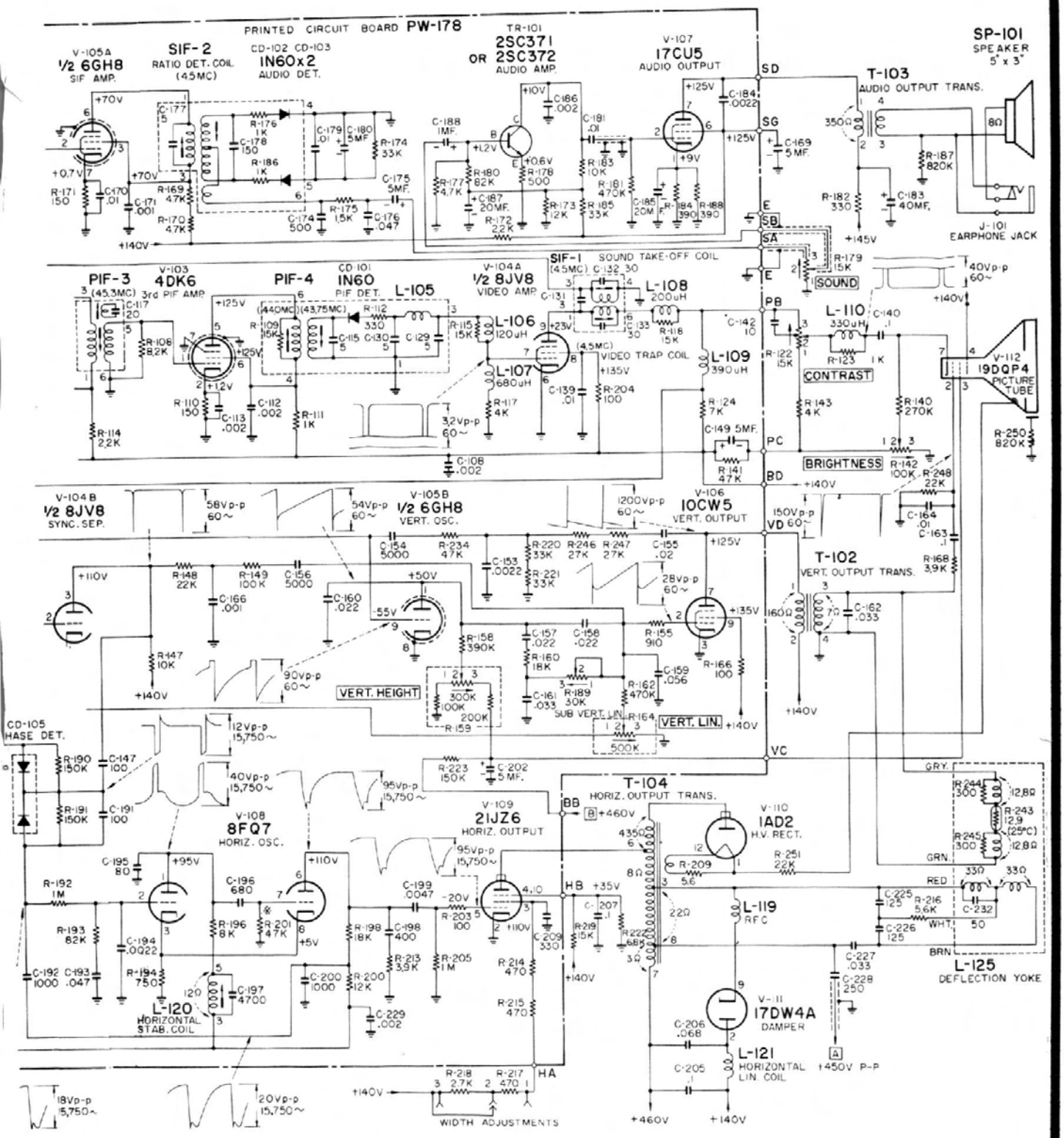

Fig. 5-68. Penncrest Model 2374-87 TV (made by Toshiba America Inc.). (Courtesy J. C. Penney Co.)

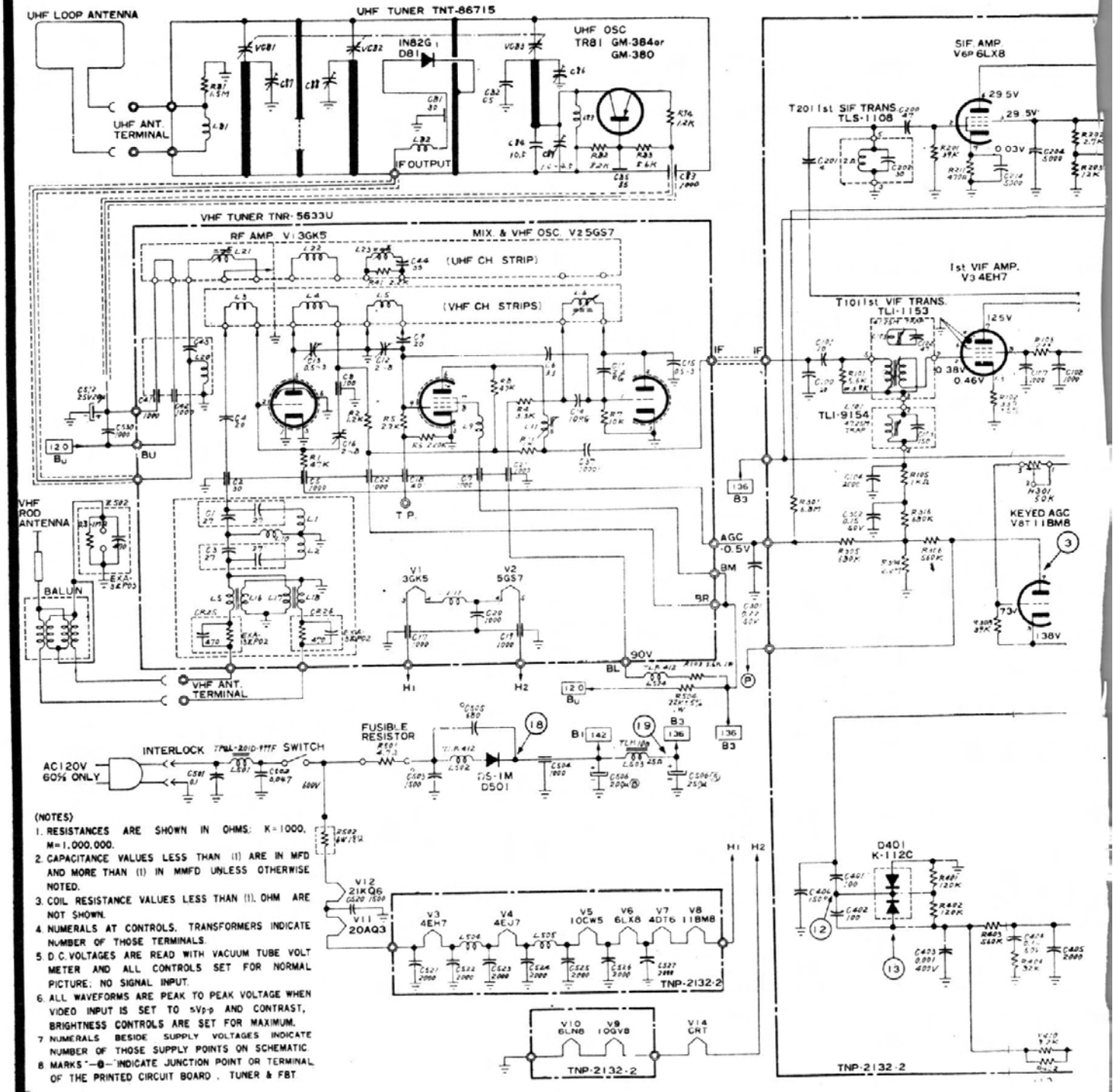
UHF LOOP ANTENNA
UHF TUNER TNT-86715
UHF OSC
TR81 GM-384or
GM-380
IN82G
D81
UHF ANT.
TERMINAL
IF OUTPUT
SIF AMP.
V6P 6LX8
T201 1st SIF TRANS.
TLS-1108
29.5V
0.03V
VHF TUNER TNR-5633U
RF AMP. V1 3GK5
MIX. & VHF OSC. V2 5GS7
(UHF CH. STRIP)
(VHF CH. STRIPS)
1st VIF AMP.
V3 4EH7
T101 1st VIF TRANS.
TLI-1153
TLI-9154
12.5V
10.38V
0.46V
IF
VHF
ROD
ANTENNA
BALUN
VHF ANT.
TERMINAL
T.P.
V1
3GK5
V2
5GS7
H1
H2
AGC
-0.5V
KEYED AGC
V8T 11BM8
73V
138V
90V
INTERLOCK
SWITCH
AC 120V
60% ONLY
FUSIBLE
RESISTOR
D501
V12
21KQ6
V11
20AQ3
V3
4EH7
V4
4EJ7
V5
10CW5
V6
6LX8
V7
4DT6
V8
11BM8
TNP-2132-2
V10
6LN8
V9
10GV8
V14
CRT
D401
K-112C
(NOTES)
1. RESISTANCES ARE SHOWN IN OHMS; K=1000, M=1,000,000.
2. CAPACITANCE VALUES LESS THAN (1) ARE IN MFD AND MORE THAN (1) IN MMFD UNLESS OTHERWISE NOTED.
3. COIL RESISTANCE VALUES LESS THAN (1) OHM ARE NOT SHOWN.
4. NUMERALS AT CONTROLS, TRANSFORMERS INDICATE NUMBER OF THOSE TERMINALS.
5. D.C. VOLTAGES ARE READ WITH VACUUM TUBE VOLT METER AND ALL CONTROLS SET FOR NORMAL PICTURE; NO SIGNAL INPUT.
6. ALL WAVEFORMS ARE PEAK TO PEAK VOLTAGE WHEN VIDEO INPUT IS SET TO 5Vp-p AND CONTRAST, BRIGHTNESS CONTROLS ARE SET FOR MAXIMUM.
7. NUMERALS BESIDE SUPPLY VOLTAGES INDICATE NUMBER OF THOSE SUPPLY POINTS ON SCHEMATIC.
8. MARKS "—@—" INDICATE JUNCTION POINT OR TERMINAL OF THE PRINTED CIRCUIT BOARD, TUNER & FBT.

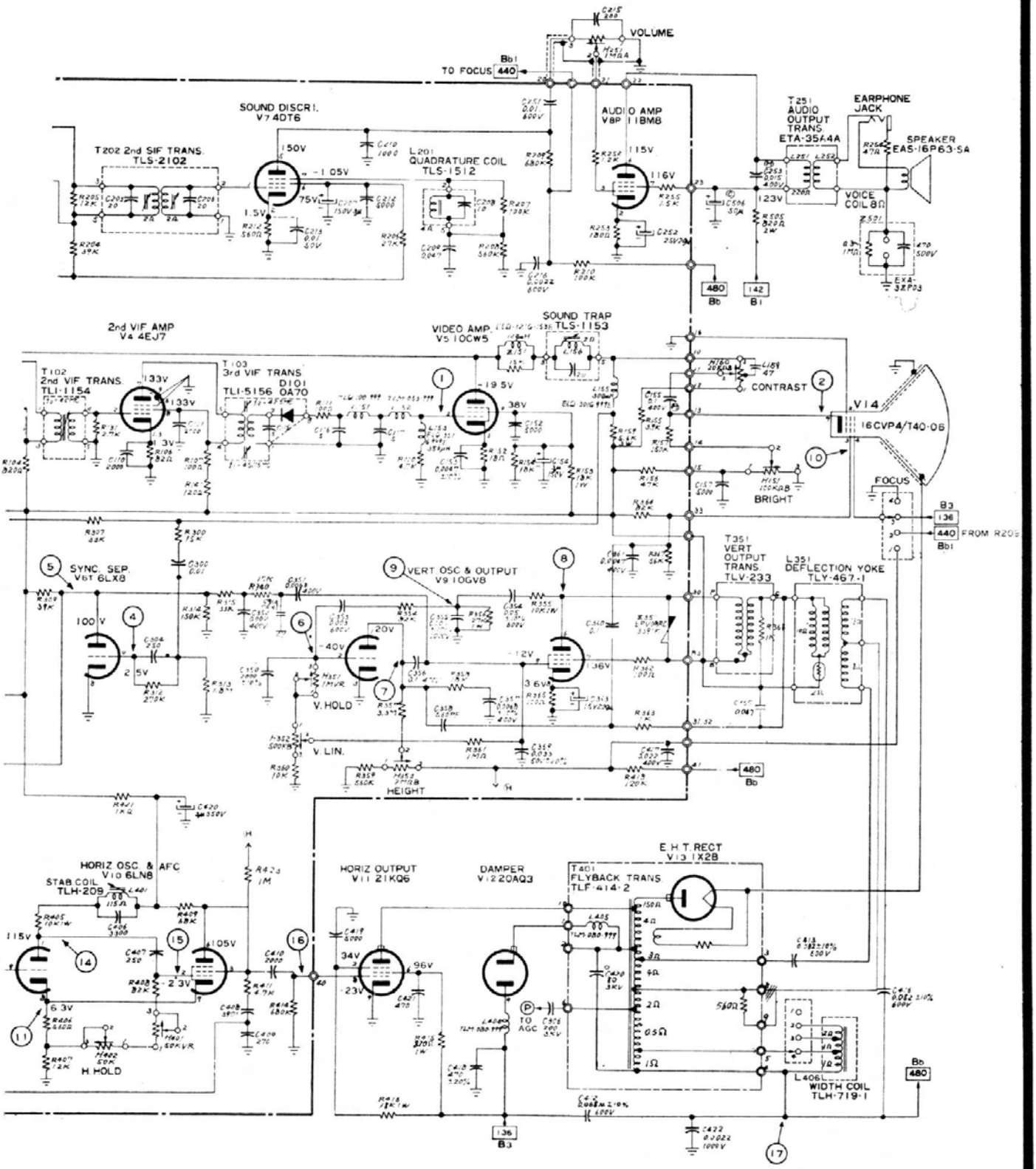

Fig. 5-69. Penncrest Model 2326 portable TV (made by Matsushita Electric Corp. of America). (Courtesy J. C. Penney Co.)

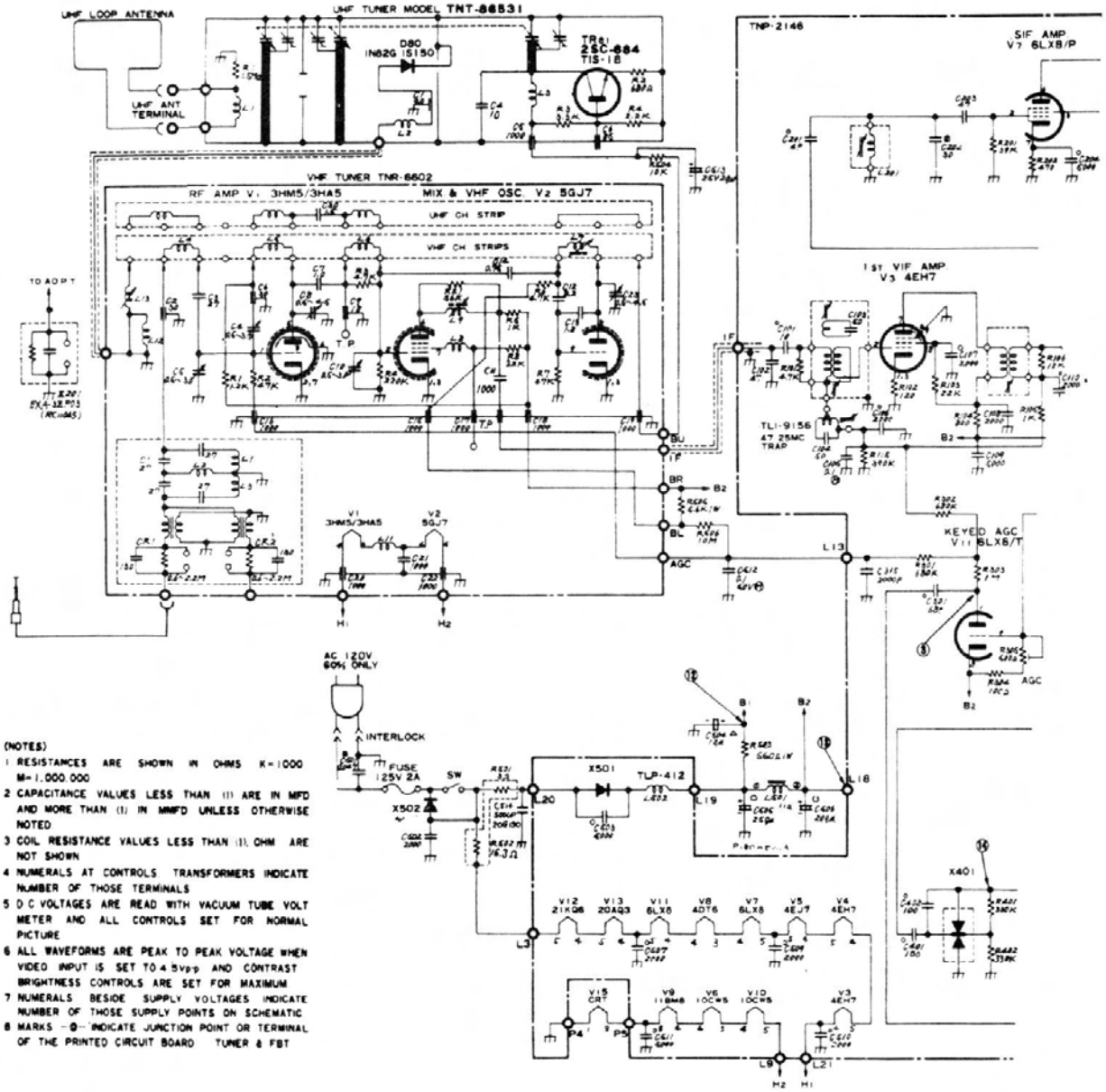

(NOTES)

1 RESISTANCES ARE SHOWN IN OHMS K=1000 M=1,000,000

2 CAPACITANCE VALUES LESS THAN (1) ARE IN MFD AND MORE THAN (1) IN MMFD UNLESS OTHERWISE NOTED

3 COIL RESISTANCE VALUES LESS THAN (1) OHM ARE NOT SHOWN

4 NUMERALS AT CONTROLS TRANSFORMERS INDICATE NUMBER OF THOSE TERMINALS

5 D C VOLTAGES ARE READ WITH VACUUM TUBE VOLT METER AND ALL CONTROLS SET FOR NORMAL PICTURE

6 ALL WAVEFORMS ARE PEAK TO PEAK VOLTAGE WHEN VIDEO INPUT IS SET TO 4.5Vpp AND CONTRAST BRIGHTNESS CONTROLS ARE SET FOR MAXIMUM

7 NUMERALS BESIDE SUPPLY VOLTAGES INDICATE NUMBER OF THOSE SUPPLY POINTS ON SCHEMATIC

8 MARKS —⊖— INDICATE JUNCTION POINT OR TERMINAL OF THE PRINTED CIRCUIT BOARD TUNER & FBT

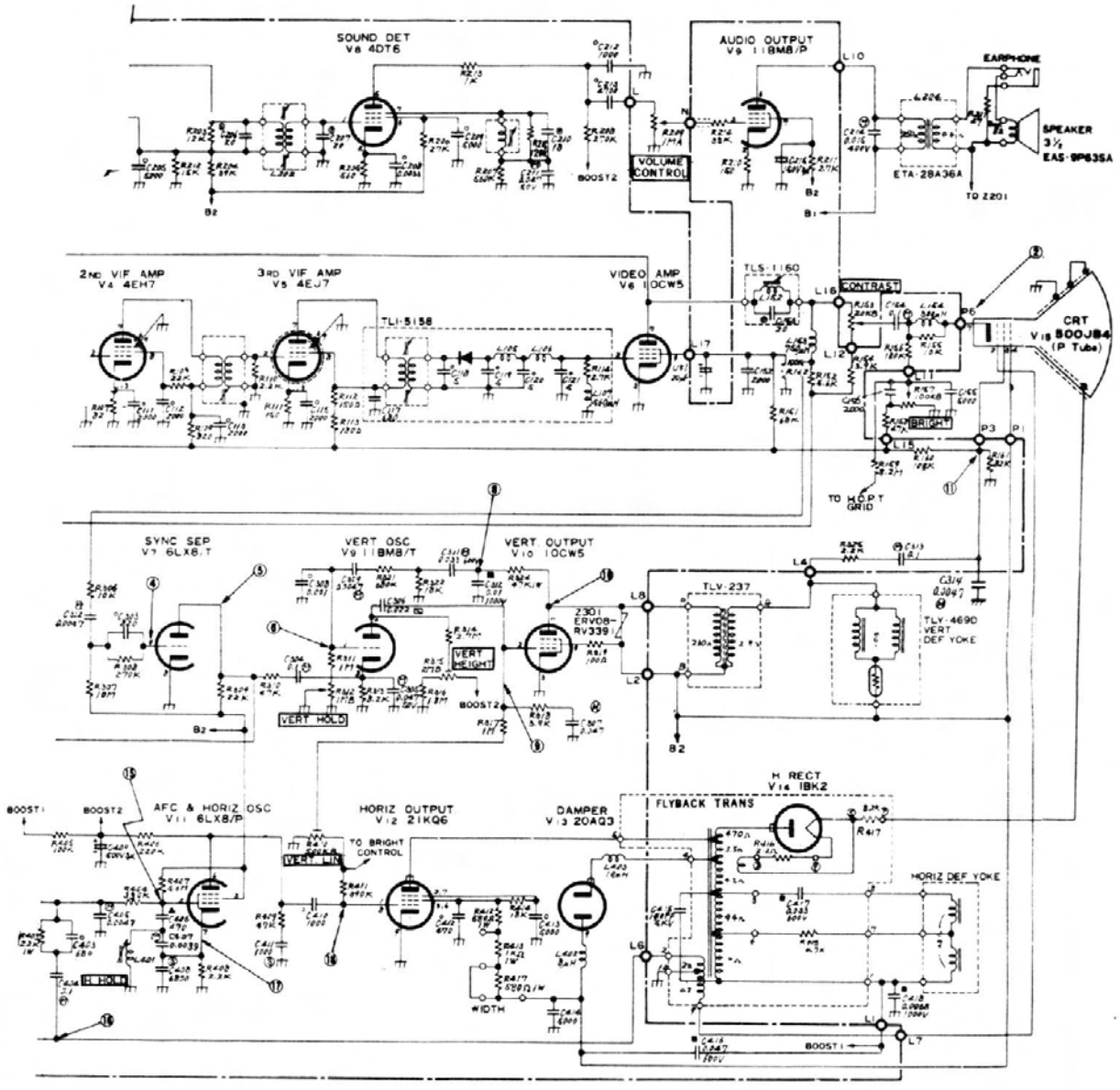

Fig. 5-70. Penncrest Model 2363-43 TV (made by Matsushita Electric Corp. of America). (Courtesy J. C. Penney Co.)

NOTE:

1. ALL CARBON DEPOSIT FILM RESISTOR(RD) VALUES IN OHMS ±10% TOLERANCE 1/2WATT UNLESS OTHERWISE NOTED.
2. ALL CARBON COMPOSITION RESISTOR(RC) VALUES IN OHMS ±20% TOLERANCE 1/2 WATT UNLESS OTHERWISE NOTED.
3. ALL MICA AND PAPER CONDENSERS ±20% TOLERANCE UNLESS OTHERWISE NOTED.
4. ALL CERAMIC CONDENSER(※ MARK DISC TYPE) VALUES IN MICRO-MICRO FARADS ±100% TOLERANCE UNLESS OTHERWISE NOTED.
5. ALL VOLTAGE MEASURED BETWEEN POINTS INDICATED AND CHASSIS, USING AN ELECTRONIC VOLTMETER. ALL VOLTAGE READINGS ±15% WITH INCOMING SIGNAL AND WITH CONTRAST CONTROL SET TO PRODUCE 60VOLTS PEAK TO PEAK AT KINESCOPE.
6. ※※ MARK HEAT COEFFICIENT.

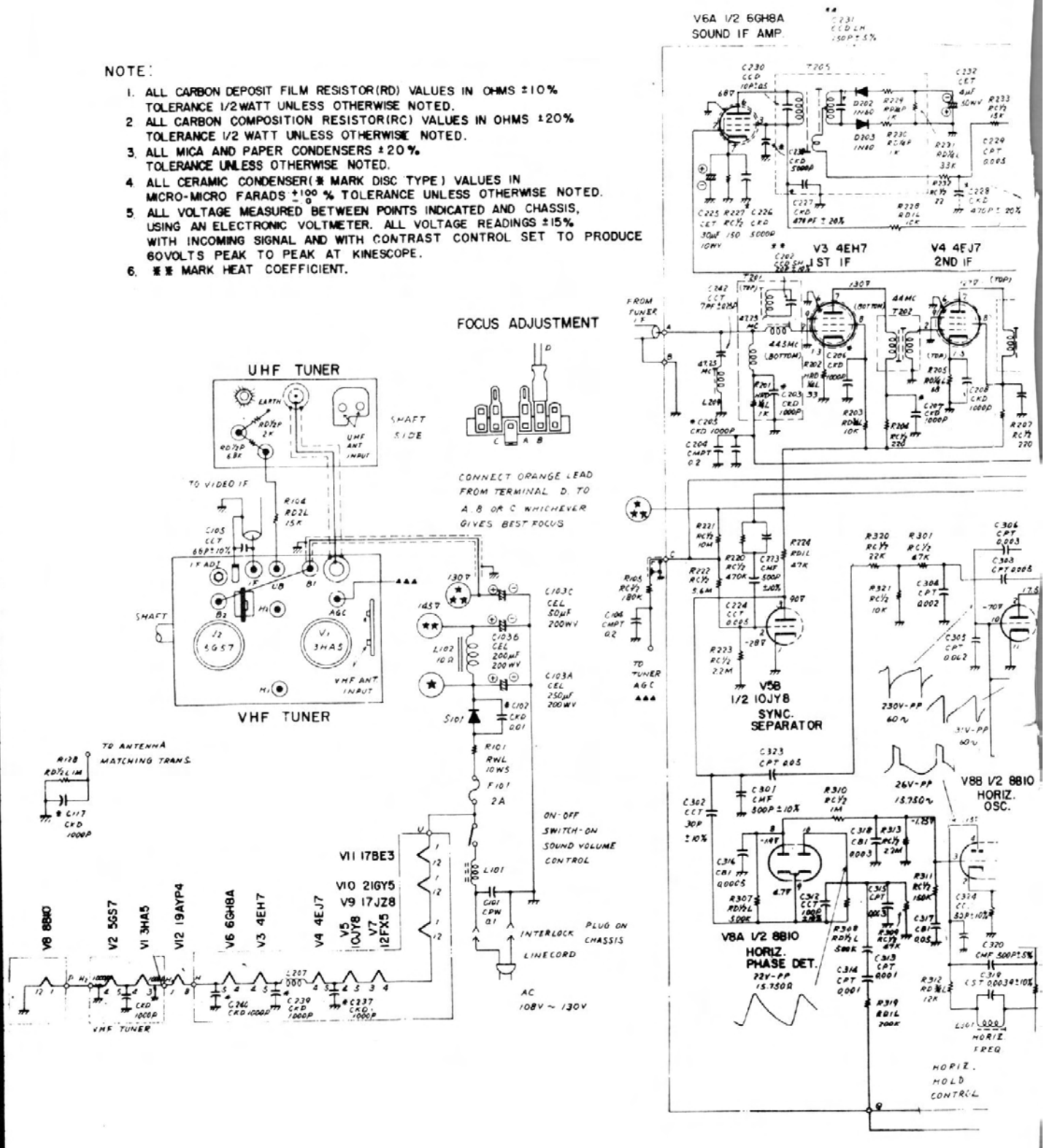

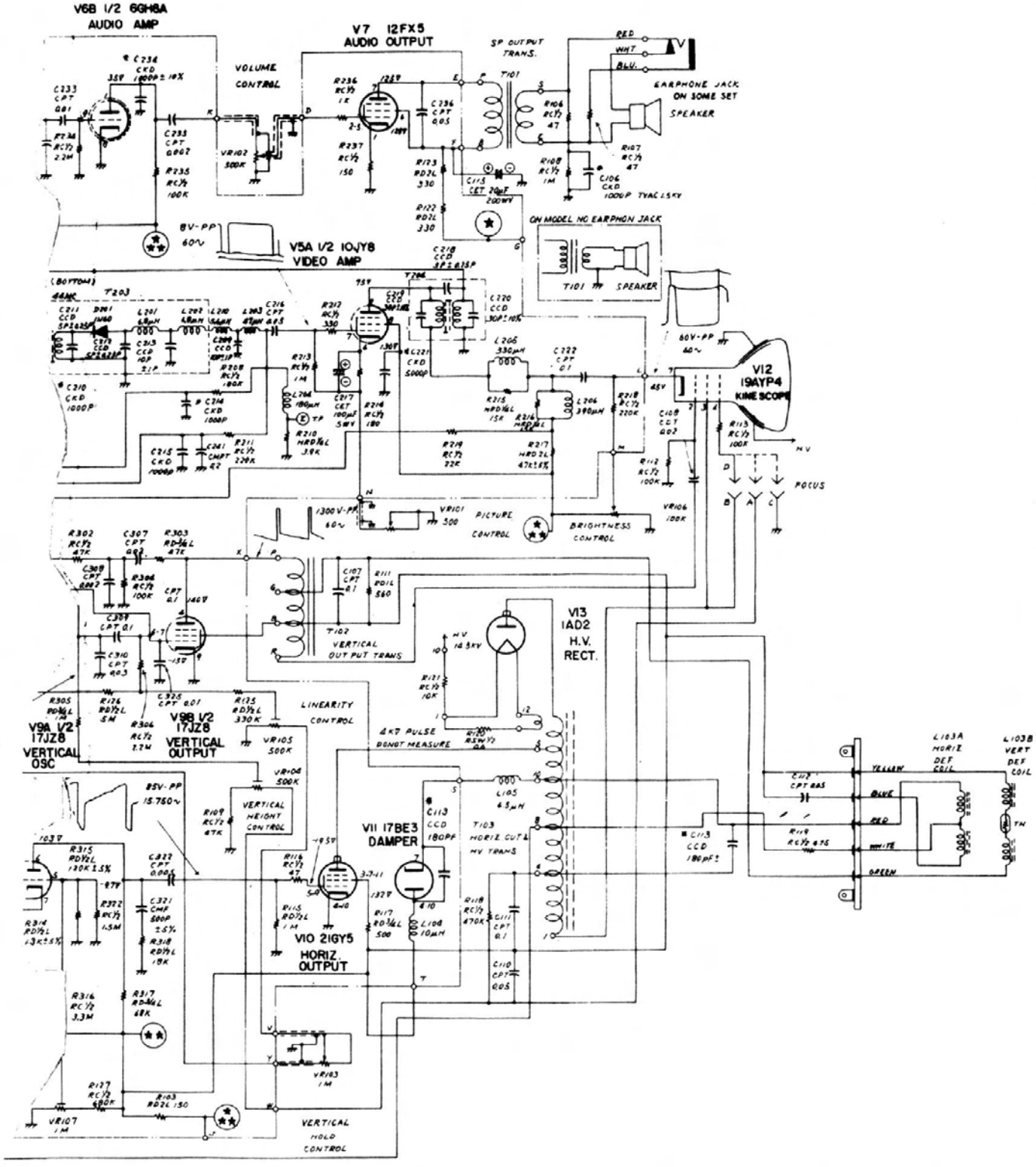

Fig. 5-71. Olympic Model 9P44, 45, 46, 54 TV. (Courtesy Olympic Division Lear Siegler, Inc.)

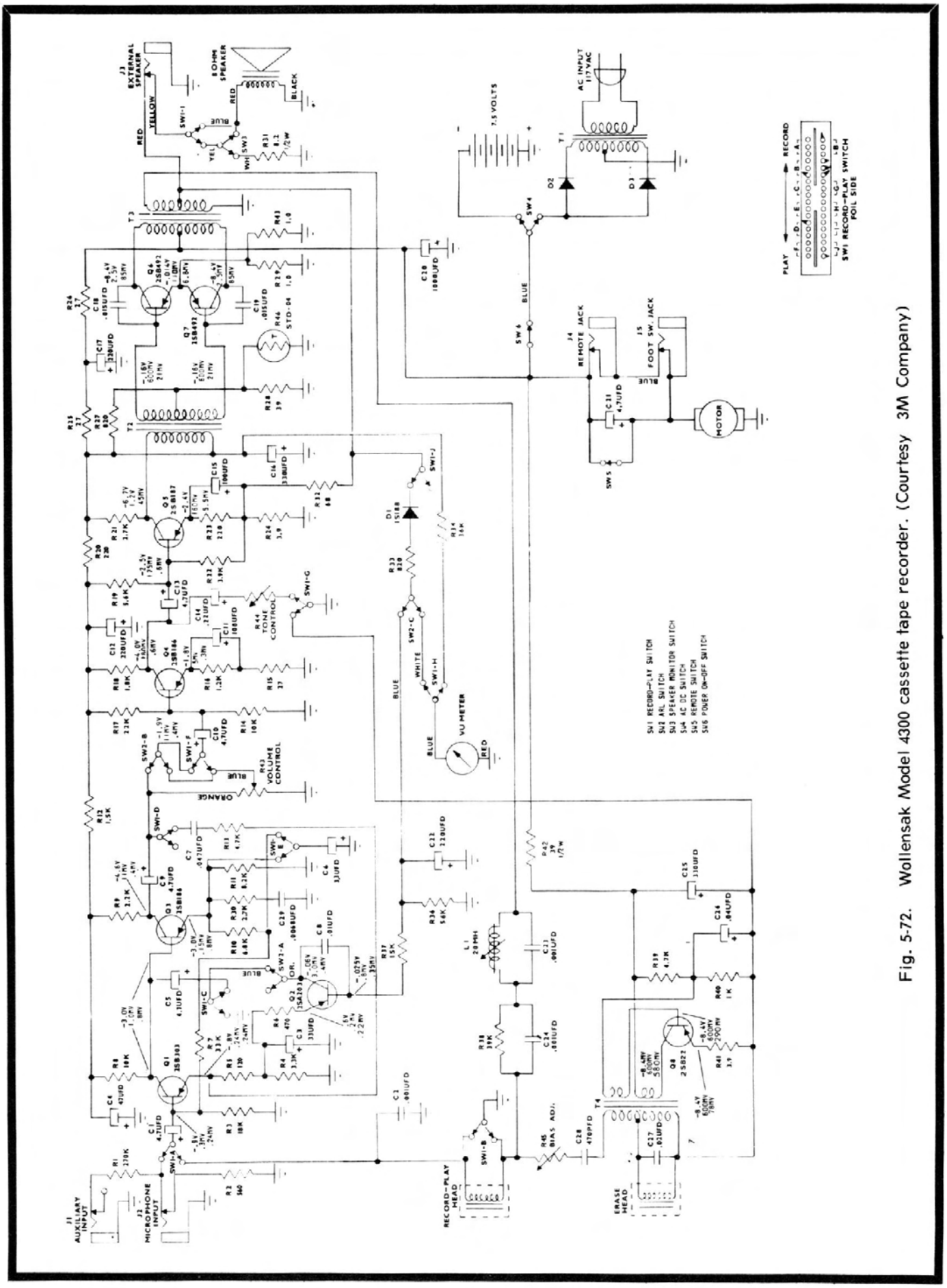

Fig. 5-72. Wollensak Model 4300 cassette tape recorder. (Courtesy 3M Company)

Appendix

IMPORTERS & DISTRIBUTORS OF JAPANESE CONSUMER ELECTRONIC PRODUCTS

Brand	Name	Address
Admiral	Admiral Corporation	3800 West Cortland St. Chicago, Ill. 60647 (312) 292-2600
AFCO	AFCO Electronics, Inc.	P. O. Box 973 Oakland, California 94604 (415) 635-7000
Aircastle	Spiegel, Inc.	2511 West 23rd St. Chicago, Ill. 60608 (312) YA 7-5600
AITC	International Transistor Corp.	Suite 843 1206 South Maple Ave. Los Angeles, Calif. 90015 (213) 746-3927
Aiwa	Aiwa Int'l Corp.	1 East Wacker Drive Chicago, Ill. 60611 (312) 467-5165
Alaron	B & B Import, Export Co.	15755 Wyoming Ave. Detroit, Michigan 48238 (313) 864-9015
Alfred	Capin Mercantile Corp.	109 Nelson Avenue Nogales, Arizona 85621 (602) 287-4141
Allied	Allied Radio Corp.	111 N. Campbell Ave. Chicago, Ill. 60680 (312) 421-6800
Alpha	A & G Stationary Co.	73 Fifth Avenue New York, N.Y. 10003 (212) 989-8122
Ambassador	Allied Stores Corp.	401 Fifth Avenue New York, N.Y. 10016 (212) 679-4061
AMC	Aimcee Wholesale Corp.	1440 Broadway New York, N. Y. 10018 (212) PE 6-7611

AMD	World Mark Electronics	663 Dowd Avenue Elizabeth, New Jersey 07201 (201) 289-4604
Amico	Exhibit Sales Company	3633 I Street Philadelphia, Pa. 19134 (215) PI 4-9500
Annable	J. M. Fields	450 West 33rd Street New York, N.Y. 10001 (212) 736-1200
Aristo	Aristo Industries	240 Fifth Avenue New York, N.Y. 10001 (212) 685-2060
Arrow	Arrow Trading Co.	220 Fifth Avenue New York, N. Y. 10001 (212) 686-4070
Arvin	Arvin Industries Inc.	1531 13th Street Columbus, Ind. 47201 (812) 372-7271
Audition	F. W. Woolworth	233 Broadway New York, N.Y. 10010 (212) 227-1000
Aud-I-Tone	JJJ Merchandise	15 West 26th Street New York, N.Y. 10010 (212) 686-6416
Barkleigh	Barker Stores	815 Hutchinson River Pkwy Bronx, New York 10465 (212) 597-7300
Baylor	Vision Electronics Inc	1116 East Houston St. San Antonio, Tex. 78206 (512) 224-6686
Belair	Belair Enterprises	5873 Rodeo Road Los Angeles, Calif. 90016 (213) 870-9273
Big Bem	Tokyo Sansei (N.Y.) Inc.	1170 Broadway New York, N.Y. 10001 (212) 684-0232
Bowman	Calif. Auto Radio Inc.	9426 Stewart & Gary Road Downey, Calif. 90241 (213) 923-9848
Bradford	W.T.Grant	1441 Broadway New York, N.Y. 10018 (212) 564-1000
Broadmoor	Broadmoor Industries	530 Santa Rosa Drive Des Plaines, Ill. 60018 (312) 774-3047

Browni	Charles Brown & Company	34 West 27th Street New York, N.Y. 10001 (212) MU 3-0802
Bulova	Bulova Watch Company	630 Fifth Avenue New York, N.Y. 10020 (212) LT 1-0400
Bush	Trans American Electronics	9501 West Devon Avenue Rosemont, Ill. 60018 (312) 692-5181
Candle	Candle America, Inc.	1457 Venice Boulevard Los Angeles, Calif. 90006 (213) 386-3653
Captain	Capin Mercantile Corp.	109 Nelson Avenue Nogales, Arizona 85621 (602) 287-4141
Channel Master	Channel Master	Ellenville, N.Y. 12428 (914) 647-5000
Claricon	World Mark Electronics	663 Dowd Avenue Elizabeth, N.J. 07201 (201) 289-4604
Commodore	Commodore Import Co.	507 Flushing Avenue Brooklyn, N.Y. 11205 (212) 522-3407
Concord	Concord Electronics Corp.	1935 Armacost Avenue Los Angeles, Calif. 90021 (213) 623-2421
Continental	Calif. Auto Radio, Inc.	9426 Stewart & Gray Road Downey, Calif. 90241 (213) 923-9848
Coronado	Sound Design Corp.	34 Exchange Place Jersey City, N.J. 07302 (201) 434-1050
Country	King Korn Marketing Div. of Fullview Industries, Inc.	6001 North Clark St. Chicago, Ill. 60626 (312) 973-1700
Craig	Craig Corporation	2302 East 15th St. Los Angeles, Calif. 90021 (213) 623-2421
Crown	Crown Radio Corp.	755 Folsom St. San Francisco, Calif. 94107 (213) 781-8285
Daltone	Dalamal & Sons, Inc.	107 Franklin St. New York, N.Y. 10013 (212) 226-1000
Decca	Decca Records Co.	441 Park Avenue New York, N.Y. 10022 (212) 759-7500

Delmonico	JVC America, Inc.	50-35 56th Road Maspeth, N.Y. 11378 (212) 392-2668
Delux	Imperial Import Co.	1199 Broadway New York, N.Y. 10001 (212) MU 6-7830
Denon	Sheraton Electronics	310 Fifth Avenue New York, N.Y. 10001 (212) 244-3718
Doral	Global Import & Export	3817 West Flagler St. Miami, Florida 33134 (305) 445-8566
Douglas	Son Lee Electronics Corp.	1227 Broadway New York, N.Y. 10001 (212) 889-7040
Drexel	Drexel Radio Corp.	P. O. Box 15156 New Orleans, La. 70115 (504) 899-9505
Eagle	Topp Electronics, Inc.	4201 N.W. 77th Ave. Miami, Fla. 33166 (305) 887-6201
Edge	Son-Lee Electronics, Corp.	1227 Broadway New York, N.Y. 10001 (212) 889-7040
Eldorado	A. Cohen & Sons	27 West 23rd St. New York, N.Y. 10010 (212) 675-4400
Electra	Electra Radio Corp.	75 New Hook Road Bayonne, N.J. 07002 (212) 675-7640
Electro	Electro-Brand, Inc.	210 West Chestnut St. Chicago, Ill. 60610 (312) WH 4-5460
Electrophonic	Morse Electro Products	9200 Atlantic Ave. Ozone Park, N.Y. 11416 (212) 441-6600
Elgin	Elgin National Watch Co.	847 West Jackson Blvd. Chicago, Ill. 60607 (312) 666-3400
Elite	Allied Radio Corp.	111 N. Campbell Ave. Chicago, Ill. 60680 (312) 421-6800
E. J. Coley	Tokyo Sansei (N.Y.) Inc.	1170 Broadway New York, N.Y. 10001 (212) 684-0232

Emerson	Emerson TV & Radio	51 West 51st Street New York, N.Y. 10019 (212) 765-9730
Empire	Trade Distributors	1199 Broadway New York, N.Y. 10001 (212) 686-5887
Encore	Caltrad	360 9th Street San Francisco, Calif. 94103 (415) 626-6565
Fabulloyds	Lloyd's Electronics Inc.	59 North 5th Street Saddlebrook, N.J. 07662 (201) 843-5115
Faircrest	J.M. Fields	450 West 33rd Street New York, N.Y. 10001 (212) 736-1200
Fanon	Fanon Electronics	100 Hoffman Place Hillside, N.J. 07205 (201) 399-3400
Fantavox	Marshall Field & Co.	111 North State Street Chicago, Ill. 60690 (312) 781-1000
Federal	Federal Transistor Co, Inc.	519 South Broadway Los Angeles, Calif. 90013 (213) 625-1304
Fen-Tone	Fen Tone International	106 Fifth Avenue New York, N.Y. 10011 (212) 675-1707
Fix Tuned	Fix Tune Solid State Electronics	1 West 30th Street New York, N.Y. 10001 (212) 683-9353
Fleetwood	Transworld Industrial Corp	5204 Hudson Avenue West New York, N.J. 07093 (201) 865-0747
Four Star	Foutune Star Products	1207 Broadway New York, N.Y. 10001 (212) MU 4-7140
Galaxy	Associated Importers, Inc.	270 West 22 St. Hialeah, Miami, Fla. (305) 888-8461
Gaytone	Hamway Import Co.	40 West 29th Street New York, N.Y. 10001 (212) MU 3-4131
GC	GC Electronics	400 South Wyman St. Rockford, Ill. 61101 (815) 968-9661

General	Trans American Electronics	6479 No. Avondale Chicago, Ill 60631 (312) 775-5700
General Electric	General Electric	Electronics Park Syracuse, N.Y. 13201 (315) 456-0123
Global	Global Import & Export	3817 West Flagler St. Miami, Fla. 33134 (305) 445-8566
Globe	GC Electronics	400 South Wyman St. Rockford, Ill. 61101 (815) 968-9661
Golden Shield	Golden Shield Corp	680 Fifth Ave. New York, N.Y. 10019 (212) LT 1-6262
Granada	Fried Trading Co.	425 Bedford Ave. Brooklyn, N.Y. 11211 (212) 387-1157
Grand Prix	Charles Brown & Co.	34 West 27th Street New York, N.Y. 10001 (212) MU 3-0802
Halco	Halen Associates	125 Fifth Avenue New York, N.Y. 10003 (212) 777-3380
Hammerlund	Electronic Assistance Corp	20 Bridge Avenue Red Bank, N.J. 07701 (201) 747-5100
Heritage	Heritage Int'l. Trading Co.	1330 Stuyvesant Ave. Union, N.Y. 07083 (201) 964-1330
Highwave	Marvel International	30 East 42nd St. New York, N.Y. 10017 (212) 661-2850
Hit	Heritage International Trading Co.	1330 Stuyvesant Ave. Union, N.J. 07083 (201) 964-1330
Hitachi	Hitachi Sales Corp.	48-50 34th Street Long Island City, N.Y. 11101 (212) 361-3090
Ideal	International Distributors Inc.	1178 Pope St. Memphis, Tenn. 38102 (901) 327-4136
Imperial	Imperial Import Co.	1199 Broadway New York, N.Y. 10001 (212) MU 6-7830

Invicta	Toyomenka Inc.	200 Fifth Avenue New York, N.Y. 10010 (212) 255-6298
J.B. Hunter	Allied Stores Corp.	401 Fifth Avenue New York, N.Y. 10016 (212) 679-4061
JJJ	J.J.J. Merchandise	15 West 26th Street New York, N.Y. 10010 (212) 686-6416
Juliette	Topp Electronics Inc.	40 Whelan Road East Rutherford New Jersey 07073 (201) 438-5544 4201 N.W. 77th Ave. Miami, Fla. 33166 (305) 887-6201
Katone	Katone Corporation	37 West 28th St. New York, N.Y. 10001 (212) 889-6240
Kensington	Etenel Import Co.	410 N. Milwaukee Ave. Chicago, Ill. 60610 (312) 829-5100
Keystone	Atlas-Rand Corp	Keystone Place Paramus, N.J. 07652 (201) 262-7500
Kowa	Kowa American Corp.	230 Fifth Avenue New York, N.Y. 10001 (212) LE 2-0663
Koyo	Koyo International, Inc. of America	330 Madison Avenue New York, N.Y. 10017 (212) YU 6-0141
	Mason Camera Co., Inc.	1141 Broadway New York, N.Y. 10001 (212) 889-7555
	Global Import & Export Inc.	3817 West Flagler St. Miami, Fla. 33134 (305) 373-0674
Kron	Imperial Import Co.	1199 Broadway New York, N.Y. 10001 (212) MU 6-7830
Kroy	York Radio Corp.	15 Empire Boulevard So. Hackensack, N.J. 07606 (201) 488-7400
Lafayette	Lafayette Radio and Electronics	111 Jericho Turnpike Syosset, L.I. N.Y. (516) 921-7700

Lark	Caltrade Mfg. and Trading Co.	360 Ninth Street San Francisco, Calif. 94103 (415) 626-6565
Levtron	Vision Electronics Inc	1116 East Houston St. San Antonio, Tex. 78206 (512) 224-6686
Lloyds	Lloyd's Electronics Inc	59 North 5th Street Saddlebrook, N.J. (201) 843-5115
Longines Symphonette	Longines Symphonette	200 Myrtle Boulevard Larchmont, N.Y. 10538 (914) 834-6800
Lord Barkleigh	Barker Stores	815 Hutchinson River Pkwy Bronx, N.Y. 10465 (212) 597-7300
Lovely	Gonzalo Palenzrela Inc	Rio Piedras Puerto Rico
Luxtone	Luxor International Industries	39 West 29th Street New York, N.Y. 10001 (212) 889-4331
Magnavox	The Magnavox Company	2131 Bueter Road Fort Wayne, Ind. 46803 (219) 743-9721
Mar-Lin	Mar-Lin Radio Corp	45 West 27th Street New York, N.Y. 10001 (212) 686-8630
	Mar-Lin West Limited	1515 Santee Street Los Angeles, Calif. 90015 (213) 749-3219
Marvel	Marvel International	30 East 42nd Street New York, N.Y. 10017 (212) 661-2850
Master Control	World Mart, Inc.	201 N.W. 21st Street Miami, Fla. 33127 (305) 358-1778
Masterwork	Columbia Records	51 West 52nd Street New York, N.Y. 10019 (212) 765-4321
Mayfair	Mayfair Electronics Corp	666 West Kinzie St. Chicago, Ill. 60610 (312) 243-8050
Magatone	Noam Electronics	60 West 45th St. New York, N.Y. 10036 (212) 261-0880
Mercury	Pax Limited	5125 Church St. Skokie, Ill. 60076 (312) 966-1690

Metex	Pan American Dynamic Corp	118-21 Queens Blvd. Forest Hills, N.Y. 11375 (212) 261-0880
Mexko	Puchi Properties Inc.	405 Grand Avenue Nogales, Arizona (602) 287-4743
Midland	Midland International Corp	1909 Vernon St. North Kansas City, Mo. 64119 (816) 842-0511
Mitsubishi	Mitsubishi Electric Corp	277 Park Avenue New York, N.Y. 10017 (212) 922-6767
Monarch	Monarch Electronics Int'l., Inc.	7035 Laurel Canyon Blvd. North Hollywood, Calif. 91605 (213) 765-1810
Moore	OTC Int'l. (Chicago) Inc.	205 West Wacker Drive Chicago, Ill. 60606 (312) 782-3095
Morse	Morse Electro Products Corp	9200 Atlantic Ave. Ozone Park, N.Y. 11416 (212) 441-6600
Motorola	Motorola, Inc.	9401 West Grand Ave. Franklin Park, Ill. 60131 (312) 625-6000
Muskat	Bel-Mar Inc.	1942 N.E. 151th St. N. Miami Beach, Fla. 33160 (305) 945-5338
Naco	North America Foreign Trading Corp	1115 Broadway New York, N.Y. 10010 (212) 255-5400
Net	Net Electronics	8315 East Firestone Blvd. Downey, Calif. 90241 (213) 773-4591
Nivico	Delmonico International	50-35 56th Road Maspeth, N.Y. 11378 (212) 392-2668
Nobility	New York Merchandise Co., Inc.	32 West 23rd St. New York, N.Y. 10010 (212) OR 5-3500
Nordmende	Sterling Hi Fidelity, Inc.	22-20 40th Avenue Long Island City, N.Y. 11101 (212) 361-8989
Nuvox	Nuvox Electronics Corp	150 Fifth Avenue New York, N.Y. 10011 (212) 243-2110

Oki	Oki Electric Industry Co., Limited	202 East 44th St. New York, N.Y. 10017 (212) MU 2-1665
Olympic	Olympic Division Lear Siegler, Inc.	89-89 Union Turnpike Glendale, N.Y. (212) 261-9300
Omgs	North America Foreign Trading Company	1115 Broadway New York, N.Y. 10010 (212) 255-5400
Onkyo	World Mark, Inc.	201 N.W. 21st St. Miami, Fla. 33127 (305) 358-1778
Panasonic	Matsushita Electric Corp of America	200 Park Avenue New York, N.Y. 10017 (212) 973-5700
Peerless	Peerless Telerad Inc	162 Fifth Avenue New York, N.Y. 10010 (212) 255-2808
Penncrest	J. C. Penney	1301 Sixth Avenue New York, N.Y. 10019 (212) 957-4321
Petite	Sterling Hi Fidelity Inc	22-20 40th Avenue Long Island City, N.Y. 11101 (212) EM 1-8989
Philco	Philco-Ford Corporation	Tioga & "C" Streets Philadelphia, Pa. 19134 (215) 443-6491
Pianola	Calif. Auto Radio, Inc	9426 Steward & Gary Road Downey, Calif. 90241 (213) 923-9848
Playtape	Playtape, Inc.	1115 Broadway New York, N.Y. 10010 (212) 675-8050
Princeton	Arlans Dept. Stores, Inc.	393 Seventh Ave. New York, N.Y. 10001 (212) 790-2100
Realistic	Radio Shack Corp	730 Common wealth Ave. Boston, Mass. 02215 (617) 734-1000
Realtone	Realtone Electronics	34 Exchange Place Jersey City, N.J. 07302 (201) 434-1050
Rhapsody	B & B Import Co	15755 Wyoming Avenue Detroit, Mich. 48238 (313) 864-9015

Rivera	National Electronics, Inc.	800 N.W. 73rd St. Miami, Fla. 33150 (305) 836-0231
Roberts	Roberts Electronics Division of Rheem Mfg. Co.	5922 Bowcroft St. Los Angeles, Calif. 90016 (213) 870-9631
Robin	Mason Camera	1141 Broadway New York, N.Y. 10001 (212) 889-7555
Robins	Robins Industries Corp	15-58 127th Street Flushing, N.Y. 11356 (212) 445-7200
Romar	D. Plough Distributing Co.	P. O. Box 2266 Memphis, Tenn 38102 (901) 525-4581
Ross	Ross Electronics Corp.	2834 South Lock St. Chicago, Ill. 60608 (312) 376-9660
Roxy	Mason Camera	1141 Broadway New York, N.Y. 10001 (212) 889-7555
	Omega Import-Export Co.	P. O. Box 14141 Norfolk, Virginia 23518 (703) 587-8130
Sansui	Sansui Electronics Corp	32-17 61 Street Woodside, N.Y. 11377 (212) 446-6300
Saxony	Trans-Aire Electronics	85 Denton Ave. New Hyde Park, N.Y. 11040 (516) 384-1300
Seavox	Fried Trading Company	423 Bedford Avenue Brooklyn, N.Y. (212) 387-1157
Seminole	Sans & Streiffe	8400 Brookfield Ave. Brookfield, Ill. 60513 (312) 485-6200
Setico	Setico Import Company	2321 Liberty Street Jacksonville, Fla. (904) 356-5841
Sharp	Sharp Electronics Corp	178 Commerce Road Carlstadt, N.J. 07072 (201) 933-4200
Sheraton	Sheraton Electronics	310 Fifth Avenue New York, N.Y. 10001 (212) 244-3718

Skymaster	New York Merchandising Co	32 West 23rd Street New York, N.Y. 10010 (212) OR 5-3500
Sony	Sony Corp. of America	47-47 Van Dam Street Long Island City, N.Y. 11101 (212) 361-8600
Soundesign	Realtone Electronics	34 Exchange Place Jersey City, N.J. 07302 (201) 434-1050
Spica	Pinrosgar Inc	862 6th Avenue New York, N.Y. 10001 (212) 683-0340
Spinola	Son-Lee Electronics Corp	1227 Broadway New York, N.Y. 10001 (212) 889-7040
	Spinola International Corp	315 Fifth Avenue New York, N.Y. 10016 (212) MU 6-5810
St. Mortiz	Manhattan Novelty Co.	263 Canal Street New York, N.Y. 10013 (212) 226-1081
Standard	Standard Radio Corp.	60-09 39th Avenue Woodside, N.Y. 11377 (212) 651-6100
Starfire	Mar-Lin Radio Corp.	45 West 27th Street New York, N.Y. 10001 (212) 686-8630
Stellar	Astro Trading Co.	175 Fifth Avenue New York, N.Y. 10010 (212) 254-9995
Sterling	Sterling Hi Fidelity Inc	22-20 40th Avenue Long Island City, N.Y. 11101 (212) 361-8989
Stewart	Lynn Stewart Company	439 East Illinois St. Chicago, Ill. 60611 (312) 664-1515
Sublime	Ramson Trading Co.	1185 Broadway New York, N.Y. 10001 (212) 679-9066
Summit	Pinrosgar Inc.	862 6th Avenue New York, N.Y. 10001 (212) 683-0340
Superscope	Superscope, Inc.	8150 Vineland Avenue Sun Valley, Calif. 91352 (213) MU 6-5810

Supersonic	Gonzalo Palenzula, Inc.	G.P.O. Box 2061 San Juan, Puerto Rico 00936
Super Macy	Macy's Dept. Store	Any Branch (212) 392-0500
Sylvania	Sylvania Entertainment Products	700 Ellicott Street Batavia, N.Y. 14021 (716) 343-3470
Symphonic	Symphonic Electronic Corp	470 Park Avenue South New York, New York 10018 (212) 889-6800
Tact	Hamway Import Company	40 West 29th Street New York, N.Y. 10001 (212) MU 3-4131
Teac	Teac Corp. of America	1547 18th Street Santa Monica, Calif. 90404 (213) 394-0240
Telex-Phonola	Waters Conley Co., Inc	645 N. Michigan Ave. Chicago, Ill. 60611 (312) 944-5125
Telmar	Martel Electronic Sales Inc	1199 Broadway New York, N.Y. 10001 (212) 684-5452
Tempest	Azad International	22 West 27th St. New York, N.Y. 10001 (212) 679-6666
Ten	Fujitsu California Inc.	16410 South Figueroa St. Gardena, Calif. 90247 (213) 227-3708
Tenna	Tenna Corporation	19201 Cranwood Parkway Cleveland, Ohio 44128 (216) 475-1400
Tenphonic	ABC Import & Export	47 West 30th Street New York, N.Y. 10001 (212) 684-2511
Toho	Tokyo Sansei (N.Y.) Inc	1170 Broadway New York, N.Y. 10001 (212) 684-0232
Tokai	Tokai Corporation	500 Fifth Avenue New York, N.Y. 10036 (212) 279-2320
Tonemaster	Broadmoor Industries	530 East Santa Rosa Drive Des Plaines, Ill. 60018 (312) 774-3047
Tonex	W.P. Hemenway Company	P. O. Box 4032 Portland, Oregon 97208 (503) 222-3687

Toshiba	Toshiba America Inc.	477 Madison Avenue New York, N.Y. 10022 (212) 758-6161
Toshri	Fedco Inc.	P.O.Box 2605 Terminal Annex Los Angeles, Calif. 90054 (213) 685-7910
Townley	The Englishtown Corp.	42 Broadway New York, N.Y. 10004 (212) 344-5590
Transworld	Electronic Industries, Inc	901 Daniel Street Kenner, Louisiana 70062 (504) 721-2392
Triumph	Fanon Electronic Ind.	439 Frelinghuysen Ave. Newark, N.J. 07114 (201) 242-3000
	Triumph Electronic Ind.	515 East Javis Des Plaines, Ill. 60018 (312) 298-3520
Truetone	Western Auto Supply	2107 Grand Avenue Kansas City, Mo. (816) 421-6700
Tussah	Tussah Corporation	1412 Broadway New York, N.Y. (212) CH 4-7370
Unelco	Unelco Electronics Corp	322 N. Eutaw Street Baltimore, Maryland 21201 (301) 539-2650
Unimetrics	Lafayette Radio and Electronics	111 Jericho Turnpike Syosset, L.I., N.Y. (516) 921-7700
Valiant	Valiant Radio Corp	380 Second Avenue New York, N.Y. 10010 (212) 674-5800
Vesper	Tokai Corporation	500 Fifth Avenue New York, N.Y. 10036 (212) 279-2320
Viscount	Consolidated Merchandise Corp	5950 Queens Midtown Expressway Maspeth, N.Y. 11378 (212) 894-5150
Vision	Vision Electronics Inc.	1116 East Houston St. San Antonio, Tex. 78206 (512) 224-6686
Waltham	International Importers	2242 S. Western Ave. Chicago, Ill. 60608 (312) CL 4-4252

Webcor	Consolidated Merchandise Corp.	5950 Queens Midtown Expressway Maspeth, N.Y. 11378 (212) 894-5150
Westinghouse	Westinghouse Electric	3 Gateway Centre P. O. Box 2278 Pittsburgh, Pa. 15230 (412) 255-3800
Wilco	OTC International (Chicago) Inc.	205 West Wacker Drive Chicago, Ill. 60606 (312) 782-3095
Wilson	Wilson Import Co.	1199 Broadway New York, N.Y. 10001 (212) 889-1970
Windsor	Windsor Pen Corp	88 Third Avenue Brooklyn, N.Y. 11217 (212) TR 5-6900
York	York Radio Corp.	15 Empire Boulevard So Hackensack, N.J. 07606 (201) 488-7400
XAM	Selectron International Co., Inc.	55 Veteran Blvd. Carlstadt, N.J. 07072 (201) 933-9296
	E, J. Korvette	1180 Avenue of the Americas New York, N.Y. 10036 (212) 560-6500

PRIVATE BRAND IMPORTERS

Fullview Town Pride	King Korn Marketing Division-Fullview Industries Inc.	6001 North Clark Street Chicago, Ill. 60626 (312) 973-1700

UNKNOWN IMPORTERS & DISTRIBUTORS

Aimor

Amoco

Bell

Cadaux

Fijion

Nanaola

Passport

Phoenix

Raleigh

Tokyo

Tony-Sonic

TAPE RECORDER IMPORTERS

Brand	Name	Address
Aiwa	Selectron International Corp	4215 West 45th St. Chicago, Ill. (312) 254-7900
AMD	World Mark Electronics Corp	663 Dowd Avenue Elizabeth, N.J. (201) 289-4604
Chancellor	Chancellor Electronics	457 Chancellor Ave. Newark, N.J. (201) 323-4900
Channel Master	Channel Master Corp	P. O. Box 620 Ellenville, N.Y. (212) 736-5420
Claricon	World Mark Electronics Corp	663 Dowd Avenue Elizabeth, N.J. (201) 289-4604
Concertone	Concertone, Inc.	2962 Landmark St. Culver City, Calif. (213) 837-6133
Concord	Concord Electronics	1935 Amacost Avenue West Los Angeles, Calif. (213) 879-1680

Concord	Ponder & Best, Inc.	58-20 Broadway Woodside, N.Y. (212) 672-9500
Craig	Craig Panorama	2102 E. 15th St. Los Angeles, Calif. (213) 623-2421
Crown	Crown Radio Corp.	150 Fifth Avenue New York, N.Y. (212) 243-7186
Crowncorder	Crown Radio Corp.	150 Fifth Avenue New York, N.Y. (212) 243-7186
Dokorder	American Dokorder Inc.	Box 2494 Main Post Office Culver City, Calif 90230
Doral	Global Import & Export Corp	858 W. 58th St. Miami, Florida (305) 373-0674
Electra	Electra Radio Corp	30 West 23rd St. New York, N.Y. (212) 675-2210
Fen-tone	Fentone Corp	106 5th Avenue New York, N.Y. (212) 675-2210
Fidelity	Ross Electronics Corp	589 E. Illinois St. Chicago, Ill. (312) 527-0505
Hitachi	Hitachi Sales Corp	48-50 34th St. Long Island,City, N.Y. (212) 361-3090
Juliette	Topp Import & Export Corp	49 West 23rd St. New York, N.Y. (212) 989-7112
Kensington	Terra International	3 East 28th Street New York,N.Y. (212) 686-8346
Lafayette	Lafayette Radio and Electronics Corp	111 Jericho Turnpike Syosset, L.I. N.Y. (516) 921-7700
Masterwork	CBS Record Corp	51 West 52nd St. New York, N.Y. (212) 765-4321
Mayfair	Artic Import Co., Inc.	666 West Kinzie St. Chicago, Ill. (312) 243-8050

Mercury	Mercury Record Corp.	35 East Wacker St. Chicago, Ill. (312) 332-5788
Midland	Midland International Corp	1909 Vernon Street North Kansas City, Mo. (816) 842-0511
Mirandette	Allied Impex Corp	300 Park Avenue New York, N.Y. (212) 477-4710
Monarch	Monarch Electronics Corp	7035 Laurel Canyon Blvd. North Hollywood, Calif. (213) 765-1810
NACO	North American Foreign Trading Co.	1115 Broadway New York, N.Y. (212) 255-5400
NIVCO	Victor Co. of Japan	c/o Delmonico International 50-35 56th Road Maspeth, N.Y. (212) 392-7100
Panasonic	Matsushita Electric Corp of America	200 Park Avenue New York, N.Y. (212) 973-5700
Realistic	Radio Shack Corp	730 Commonwealth Ave. Boston, Mass. (617) 734-1000
Realtone	Realtone Electronics Corp	34 Exchange Place Jersey City, N.J. (201) 434-1080
Roberts	Roberts Electronics	5922 Bowcroft Avenue Los Angeles, Calif. (213) 870-9631
Robette	Haskel Howard, Inc.	21 Hazeltine Road Yonkers, N.Y. (914) 779-1516
Ross	Ross Electronics	589 E. Illinois St. Chicago, Ill. (312) 527-0505
Sharp	Sharp Electronics Corp	178 Commerce Road Carlstadt, N.J. (201) 933-4200
Sony	Superscope, Inc.	37-09 56th St. Woodside, N.Y. (212) 446-7227
Superscope	Superscope, Inc.	37-09 56th St. Woodside, N.Y. (212) 446- 7227

Symphonic	Symphonic Radio and Electronics Corp	470 Park Ave. So. New York, N.Y. (212) 889-6800
TEAC	Teac Corp. of America	1547 18th St. Santa Monica, Calif. (213) 394-0240
Telmar	Martel Electronics Sales	1199 Broadway New York, N.Y. (212) 684-5452
Toshiba	Toshiba America, Inc.	477 Madison Ave. New York, N.Y. (212) 758-6161
Unicord	American Gelosco Electronics Corp	251 Park Ave. So. New York, N.Y. (212) 254-2282
Viscount	Consolidated Merchandise	520 West 34th St. New York, N.Y. (212) 594-1050
Vista	Craig Panorama	2102 E. 15th St. Los Angeles, Calif. (213) 623-2421
Wilson	Wilson Imports, Inc.	1157 Broadway New York, N.Y. (212) 683-5620

JAPANESE COLOR TELEVISION IMPORTERS

Arvin Industries, Inc.
1531 13th Street
Columbus, Indiana
(812) 372-7271

Delmonico International
(Victor Co. of Japan)
50-35 56th Road
Maspeth, N.Y.
(212) 392-7100

Hitachi Sales Corp.
48-50 34th Street
Long Island City, N.Y.
(212) 361-3090

Emerson TV & Radio Co.
680 Fifth Avenue
New York, N.Y.
(212) 757-5885

W.T. Grant
1441 Broadway
New York, N.Y.
(212) 564-1000

Matsushita Electric Corp.
of America
200 Park Avenue
New York, N.Y.
(212) 973-5700

Montgomery Wards Inc.
619 West Chicago Ave.
Chicago, Ill.

J. C. Penney Co
1301 Avenue of the Americas
New York, N.Y.
(212) 957-4321

Olympic Radio & Television Corp
34-01 38th Avenue
Long Island City, N.Y.
(212) 392-5200

Sharp Electronics Corp.
178 Commerce Road
Carlstadt, N.J.
(201) 933-4200

Symphonic Radio & Electronics Corp
470 Park Avenue South
New York, N.Y.
(212) 889-6800

Magnavox Company
270 Park Avenue
New York, N.Y.
(212) 986-0055

Parkard Bell Sales Corp
1933 S. Bundy Drive
Los Angeles, Calif.
(213) 477-6721

Pilot Radio Corp.
101 Electra Lane, East Station
Yonkers, N.Y.
(914) 237-7700

Sears Roebuck
925 South Homan Avenue
Chicago, Ill.

Singer Company
30 Rockefeller Plaza
New York, N.Y.
(212) 571-4800

Toshiba America, Inc.
477 Madison Avenue
New York, N.Y.
(212) 758-6161

JAPANESE BLACK & WHITE TELEVISION IMPORTERS

Arvin Industries
1605 Central Avenue
Columbus, Indiana
(812) 372-7271

Emerson TV & Radio Co
680 Fifth Avenue
New York, N.Y.
(212) 757-5885

Channel Master Corp
P. O. Box 620
Ellenville, N.Y.
(212) 736-5420

Crown Radio Corp
150 Fifth Avenue
New York, N.Y.
(212) 243-7186

Delmonico International (Victor Co. Of Japan)
50-35 56th Road
Maspeth, N.Y.
(212) 392-7100

W. T. Grant
1441 Broadway
New York, N.Y.
(212) 564-1000

Candle Corp. of America
1457 Venice Blvd.
Los Angeles, Calif.
(213) 386-3653

Hitachi Sales Corp
48-50 34th Street
Long Island City, N.Y.
(212) 361-3090

Matsushita Electric Corp. of America
200 Park Avenue
New York, N.Y.
(212) 973-5700

Montgomery Wards
619 W. Chicago Avenue
Chicago, Illinois

Philco International Corp
Tioga & C Streets
Philadelphia, Pa.
(215) 443-2000

Sears Roebuck Inc
925 South Homan Avenue
Chicago, Ill.

Selectron International Corp
4215 West 45th St
Chicago, Ill.
(312) 254-7900

Singer Company
30 Rockefeller Plaza
New York, N.Y.
(212) 571-4800

Toshiba America Inc
477 Madison Avenue
New York, N.Y.
(212) 758-6161

Magnavox Company
270 Park Avenue
New York, N.Y.
(212) 986-0055

J. C. Penney Co.
1301 Avenue of the Americas
New York, N.Y.
(212) 957-4321

Olympic Radio & Television Corp.
34-01 38th Avenue
Long Island City, N.Y.
(212) 392-5200

Sharp Electronics Corp.
178 Commerce Road
Carlstadt, N.J.
(201) 933-4200

Sony Corp. of America
47-47 Van Dam St.
Long Island City, N.Y.
(212) 889-6800

Symphonic Radio & Electronics Corp
470 Park Avenue South
New York, N.Y.
(212) 889-6800

Trans-America Electronic Inc. Co.
6479 North Avondale
Chicago, Illinois
(312) 775-5700

UNITED STATES DISTRIBUTORS OF CASSETTE TAPE RECORDERS

Admiral Corp
3800 Cortland St.
Chicago, Ill. 60647
(312) 292-2758

Channel Master Corp
Ellenville, N.Y.
(914) 647-5000

Concord Electronics Corp
1935 Armacost Ave
Los Angeles, Calif. 90025
(213) 478-2541

Crown Radio Corp
150 Fifth Avenue
New York, N.Y.
(212) 243-7186

Artic Import Co.
666 West Kinzie St.
Chicago, Ill. 60610
(312) 243-8050

Concertone, Inc.
3962 Landmark St.
Culver City, Calif. 90230
(213) 837-6133

Consolidated Merchandise Corp
Viscount Division
520 West 34th St.
New York, N.Y. 10001
(212) 594-1050

Electra Radio Corp.
1204 Broadway
New York, N.Y. 10001
(212) 684-2523

Emerson Radio Corp
575 Adams Avenue
Philadelphia, Pa.
(215) 728-6300

Hitachi Sales Corp
48-50 34th Street
Long Island City, N.Y. 11101
(212) 361-3090

Mercury Record Corp
35 East Wacker Drive
Chicago, Ill. 60601
(312) 332-5788

North America Foreign
Trading Co.
1115 Broadway
New York, N.Y. 10010
(212) 255-5400

Philco-Ford Corp
Tioga & C Streets
Philadelphia, Pa. 19134
(215) 443-6491

Radio Shack Corp
730 Commonwealth Ave
Boston, Mass.
(617) 734-1000

Selectron International
Co., Inc
4215 West 45th St.
Chicago, Ill. 60632
(312) 254-7900

Sharp Electronics Corp
178 Commerce Road
Carlstadt, N.J, 07072
(201) 933-4200

Symphonic Radio &
Electronics Corp
470 Park Ave. So.
New York, N.Y. 10016
(212) 889-6800

Valiant Importers
380 Second Avenue
New York, N.Y.
(212) 674-5800

General Electric Company
Consumer Electronics Division
Electronics Park
Syracuse, N.Y. 13201
(315) 456-2189

Lafayette Radio & Electronics
111 Jericho Turnpike
Syosset, N.Y.
(516) 921-7700

Midland International Corp
1909 Vernon St.
North Kansas City, Mo. 64116
(816) 842-0511

Panasonic, Division of
Matsushita Electric Corp.
200 Park Avenue
New York, N.Y. 10017
(212) 973-5700

RCA Sales Corp
600 North Sherman Drive
Indianapolis, Ind. 46201
(317) 635-9000

Ross Electronics Corp
589 East Illinois St.
Chicago, Ill. 60611
(312) 527-0505

Sony Corp. of America
47-47 Van Dam Street
Long Island City, N.Y. 11101
(212) 361-8600

Standard Radio Corp
60-09 39th Avenue
Woodside, N.Y. 11357
(212) 651-6100

Topp Import & Export, Inc.
4201 N.W. 77th Ave.
Miami, Fla. 33166
(305) 887-6201

Westinghouse Consumer Elec. Div.
Route 27 & Vineyard Road
Edison, N.J. 08840
(201) 287-2000

JAPANESE TRANSISTOR RADIO IMPORTERS

Brand	Name	Address
Adonis	A & S Trading Co	124 West 30th St. New York, N.Y. (212) PE 6-5740
Aimor	Bellelectronics	1180 Sixth Avenue New York, N.Y. (212) 689-6180
Air Castle	Import Associates of America	220 West Chestnut St. Chicago, Ill.
Airline	Montgomery Ward	619 West Chicago Ave. Chicago, Ill.
Aiwa	Selectron International	4215 West 45th St. Chicago, Ill. (312) 254-7900
Alaron	B & B Import Co.	14744 Wyoming Ave. Detroit, Mich. (313) 864-9015
Ambassador	Metasco	401 Fifth Avenue New York, N.Y. (212) 679-4061
AMC	Aimcee Wholesale Corp	1400 Broadway New York, N.Y. (212) PE 6-7611
AMC	York Radio Corp	15 Empire Blvd. So. Hackensack, N.J. (212) 488-7400
AMD	World Mark Electronics	663 Dowd Street Elizabeth, N.J. (212) 594-0460
Amico	Exhibit Sales Co.	South Third St. Philadelphia, Pa. (215) WA 5-8700

Annabel	B & B Import Co.	14744 Wyoming Ave. Detroit, Mich. (313) 864-9015
Aristo	Aristo Industries	240 Fifth Avenue New York, N.Y. (212) 685-2060
Aristo-Tone	Aristo Industries	240 Fifth Avenue New York, N.Y. (212) 685-2060
Arrow	Arrow Trading Co	220 Fifth Avenue New York, N.Y. (212) 686-4070
Audition	F. W. Woolworth Co	233 Broadway New York, N.Y. (212) 227-1000
Aud-I-Tone	J.J.J. Merchandise	15 West 26th St. New York, N.Y. (212) 686-6416
Belair	Mason Camera Corp	1141 Broadway New York, N.Y. (212) 889-7555
Belair	Hamway Import Co	40 West 29th Street New York, N.Y. (212) MU 3-4131
Belaire	Fried Trading Co	423 Bedford Ave Brooklyn, N.Y. (212) 387-1157
Belcor	Belcor Corp. Inc.	457 Chancellor Ave Newark, N.J. (201) 242-6500
Belcorder	Hamway Import Co	40 West 29th St. New York, N.Y. (212) MU 3-4131
Bradford	W. T. Grant	1441 Broadway New York, N.Y. (212) 564-1000
Browni	Charles Brown & Co	1170 Broadway New York, N.Y. (212) 683-0802
Bulova	Bulova Watch Co	630 Fifth Avenue New York, N.Y. (212) 581-0400
Bush	Trans-America Electronics	6479 North Avondale Chicago, Ill. (312) 775-5700

Candle	Candle Corp of America	1457 Venice Blvd. Los Angeles, Calif. (213) 386-3653
Capri	Alfred Toepfer, Inc.	1 Broadway New York, N.Y. (212) 944-4134
Channel Master	Channel Master Corp	P. O. Box 620 Ellenville, N.Y. (212) 736-5429
Claricon	World Mark Electronics	663 Dowd Street Elizabeth, N.J. (212) 594-0460
Commodore	Commodore Import Co.	507 Flushing Ave. Brooklyn, N.Y. (212) 522-3407
Corvette	Midland International Corp	1909 Vernon St. North Kansas City, Mo. (816) 842-0511
Craig Vista	Craig Panorama	2302 East 15th Street Los Angeles, Calif. (213) 623-2421
Crest	Alfred Toepfer, Inc.	1 Broadway New York, N.Y. (212) 944-4134
Crown	Crown Radio Corp	150 Fifth Ave New York, N.Y. (212) 243-7186
Daltone	Dalamal & Sons	107 Franklin Ave. New York, N.Y. (212) 925-5823
Delmonico	Delmonico International Corp. Victor Co. of Japan	50-35 56th Road Maspeth, N.Y. (212) 392-7100
Dia	Noam Electronics	118-21 Queens Blvd. Forest Hills, N.Y. (212) 261-0880
Domino	Noam Electronics	118-21 Queens Blvd. Forest Hills, N.Y. (212) 261-0880
Doral	Global Import & Export	858 W. Flagler St. Miami, Fla. (305) 373-0674
Dorset	Terra International	3 East 28th St. New York, N.Y. (212) 686-8364

Douglas	Son Lee Electronics	1277 Broadway New York, N.Y. (212) 889-7040
Drexel	Drexel Radio Corp	P, O. Box 15156 New Orleans, La.
Eldorado	A. Cohen & Sons	27 West 23rd St. New York, N.Y. (212) 675-4400
Electra	Electra Radio Corp	30 West 23rd St. New York, N.Y. (212) 675-2110
Electro	Electro-Brand Inc	210 West Chestnut Chicago, Ill. (312) 944-5461
Elgin	Elgin National Watch Co	25 East Washington Chicago, Ill. (312) 782-2880
Emerson	Emerson TV & Radio Co	680 Fifth Avenue New York, N.Y. (212) 757-5885
Empire	Trade Distributors	1199 Broadway New York, N.Y. (212) 686-5887
Encore	Carltrad	650 Mission St. San Francisco, Calif. (415) 781-3182
Fabulloyds	Lloyd's Trading Co.	59 North Fifth St. Saddlebrook, N.J. (212) 244-5994
Fanon	Fanon Electronics	439 Frelinghuysen Ave. Newark, N.J. (201) 243-1020
Fen-Tone	Fen Tone International	106 Fifth Avenue New York, N.Y. (212) 675-1707
Fidelity	Ross Electronics Corp	589 E. Illinois St. Chicago, Ill. (312) 527-0505
Four-Star	Fortune Star Products	1207 Broadway New York, N.Y. (212) 684-7140
Galaxy	Associated Importers, Inc	270 West 22nd St. Hialeah, Miami, Fla. (305) 888-8461

Gaytone	Hamway Import Co	40 West 29th St. New York, N.Y. (212) MU 3-4131
Granada	Fried Trading Co.	423 Bedford Ave. Brooklyn, N.Y. (212) 387-1157
Grand Prix	Charles Brown & Co.	1170 Broadway New York, N.Y. (212) 683-0802
Halco	Halen Associates	125 Fifth Avenue New York, N.Y. (212) 777-3380
Heritage	Heritage International Trading Co	1330 Stuyvesant Ave Union, N.J., (201) 964-1330
Highwave	Marvel International	11 West 42nd St. New York, N.Y. (212) 695-5427
Hit	Heritage International Trading Co.	1330 Stuyvesant Ave. Union, N.J. (201) 964-1330
Hitachi	Hitachi Sales Corp	48-50 34th St. Long Island City, N.Y. (212) 361-3090
Hiwave	Mason Camera Corp	1141 Broadway New York, N.Y. (212) 889-7555
Imperial	Imperial Import Co	1199 Broadway New York, N.Y. (212) MU 6-7830
Imperial Deluxe	Imperial Import Co	1199 Broadway New York, N.Y. (212) MU 6-7830
JJJ	J.J.J. Merchandise	15 West 26th St. New York, N.Y. (212) 686-6416
Juliette	Topp Import & Export	49 West 23rd St. New York, N.Y. (212) 989-7112
JVC	Delmonico International Corp. Victor Co. of Japan	50-35 56th Road Maspeth, N.Y. (212) 392-7100
Katone	Katone	1182 Broadway New York, N.Y. (212) 889-6240

Kensington	Terra International	3 East 28th St. New York, N.Y. (212) 686-8364
Koyo	Koyo International	330 Madison Ave. New York, N.Y. (212) YU 6-0141
Lafayette	Lafayette Electronics	P. O. Box 13 Syosset, L.I. N.Y.
LIC	Lucky International	1155 Broadway New York, N.Y. (212) 686-4755
Lloyd's	Lloyd's Trading Co.	59 North Fifth St. Saddlebrook, N.J. (212) 244-5994
Luxtone	Luxor International	294 Fifth Ave. New York, N.Y. (212) 270-3461
Magnavox	Magnavox Co	270 Park Avenue New York, N.Y. (212) 986-0055
Marvel	Marvel International	11 West 42nd St. New York, N.Y. (212) 695-5427
Mastercraft	Mastercraft Electronics	1115 Broadway New York, N.Y. (212) 989-4500
Masterwork	Columbia Record Corp.	51 West 52nd St. New York, N.Y. (212) 765-4321
Mayfair	Artic Import Co	666 West Kinzie St. Chicago, Ill. (312) 243-8050
Megatone	A & S Trading Co	124 West 30th St. New York, N.Y. (212) PE 6-5740
Metex	Noam Electronics	118-21 Queens Blvd. Forest Hills, N.Y. (212) 261-0880
Midland	Midland International Corp	1909 Vernon St. North Kansas City, Mo. (816) 842-0511
Monarch	Monarch Electronics Corp	7035 Laurel Canyon Blvd. North Hollywood, Calif. (213) 765-1810
Morse	Morse Industries Inc	9200 Atlantic Ave Ozone Park, N.Y. (212) 441-6600

NACO	North American Foreign Trading Co	1115 Broadway New York, N.Y. (212) 255-5400
Net	Net Electronics	8315 East Firestone Blvd. Downey, Calif.
Nobility	New York Merchandise Corp	32 West 23rd St. New York, N.Y. (212) 675-3500
NuVox	NuVox Electronics Corp	150 Fifth Avenue New York, N.Y. (212) 243-2110
Orion	Fried Trading Co	423 Bedford Avenue Brooklyn, N.Y. (212) 387-1157
Panasonic	Matsushita Electric	200 Park Avenue New York, N.Y. (212) 973-5700
Peerless	Peerless Telerad, Inc.	162 Fifth Avenue New York, N.Y. (212) 255-2808
Penncrest	J. C. Penney	1301 Sixth Avenue New York, N.Y. (212) 957-4321
Petite	Sterling HI-FI Co	20-20 40th Ave. Long Island City, N.Y. (212) 361-8989
Raleigh	Kaysons International	6500 Flotilla St. Los Angeles, Calif.
Realistic	Radio Shack Corp	730 Commonwealth Ave Boston, Mass. (617) 734-1000
Rhapsody	B & B Import Co	14744 Wyoming Ave. Detroit, Mich. (313) 864-9015
Robin	Mason Camera Corp	1141 Broadway New York, N.Y. (212) 889-7555
Ross	Ross Electronics Corp	589 E. Illinois St. Chicago, Ill. (312) 527-0505
Ross Magnifique	Ross Electronics Corp	589 E. Illinois St. Chicago, Ill. (312) 527-0505

St. Moritz	Manhattan Novelty Co	263 Canal Street New York, N.Y. (212) 226-1081
Saxony	Trans-Aire Electronics	85 Denton Avenue Mineola, N.Y. (516) 384-1300
Sears	Sears Roebuck Inc	925 South Homan Avenue Chicago, Ill.
Seavox	Fried Trading Co	423 Bedford Avenue Brooklyn, N.Y. (212) 387-1157
Seminole	Sans & Streiffe	8400 Brookfield Ave. Brookfield, Ill. (312) 485-6200
Sharp	Sharp Electronics	178 Commerce Road Carlstadt, N.J. (312) 933-4200
Sheraton	Sheraton Electronics Co.	401 Broadway New York, N.Y. (212) 925-0034
Silvertone	Sears Roebuck Inc	925 South Homan Ave Chicago, Ill.
Skymaster (West Coast)	New York Merchandise Corp	32 West 23rd St New York, N.Y. (212) 675-3500
Sony	Sony Corp of America	47-47 Van Dam St. Long Island City, N.Y. (212) 361-8600
Spica	Summit International	1140 Broadway New York, N.Y. (212) 683-0340
Stanbrooke	Terra International	3 East 28th St. New York, N.Y. (212) 686-8364
Starfire	Mar-Lin Enterprises	1191 Broadway New York, N.Y. (212) 684-5552
Stellar	Astra Trading Co	175 Fifth Avenue New York, N.Y. (212) 254-9995
Stereomatic	A & S Trading Co	124 West 30th St New York, N.Y. (212) PE 6-5740
Stewart	Lynn Stewart Co	439 East Illinois St. Chicago, Ill.

Summit	Summit International	1140 Broadway New York, N.Y. (212) 683-0340
Suora	Drexel Radio Corp	P.O.Box 15156 New Orleans, La.
Symphonic	Symphonic Radio & Electronics Corp	470 Park Ave. So. New York, N.Y. (212) 889-6800
Tact	Hamway Import Co	40 West 29th St. New York, N.Y. (212) MU 3-4131
Telmar	Martel Electronics Sales	1199 Broadway New York, N.Y. (212) 684-5452
Ten	Sanyo Trading Co	505 Fifth Ave. New York, N.Y. (212) 867-3474
Toho	Tokyo Sansei	1170 Broadway New York, N.Y. (212) 684-0232
Tonemaster	Broadmoor Industries	530 Santa Rosa Drive Des Plaines, Ill. (312) 774-3047
Toshiba	Toshiba America Inc.	477 Madison Ave New York, N.Y. (212) 758-6161
Townley	The Englishtown Corp	42 Broadway New York, N.Y. (212) 344-5590
Tropicana	Bellelectronics	1180 Sixth Avenue New York, N.Y. (212) 689-6180
True Tone	Western Auto Supply	2107 Grand Avenue Kansas City, Mo. (816) 421-5382
Tussah	Tussah Corp	1412 Broadway New York, N.Y. (212) 344-7370
Valiant	Valiant Importers	156 Fifth Avenue New York, N.Y. (212) 674-5800
Vesper	Tokai Corp	500 Fifth Avenue New York, N,Y. (212) 279-2320

Viscount	Consolidated Merchandise Corp	520 West 34th St. New York, N.Y. (212) 594-1050
Wilco	Sanyo Trading Co	505 Fifth Avenue New York, N.Y. (212) 867-3474
Wilson	Wilson Import Co	1157 Broadway New York, N.Y. (212) 683-5620